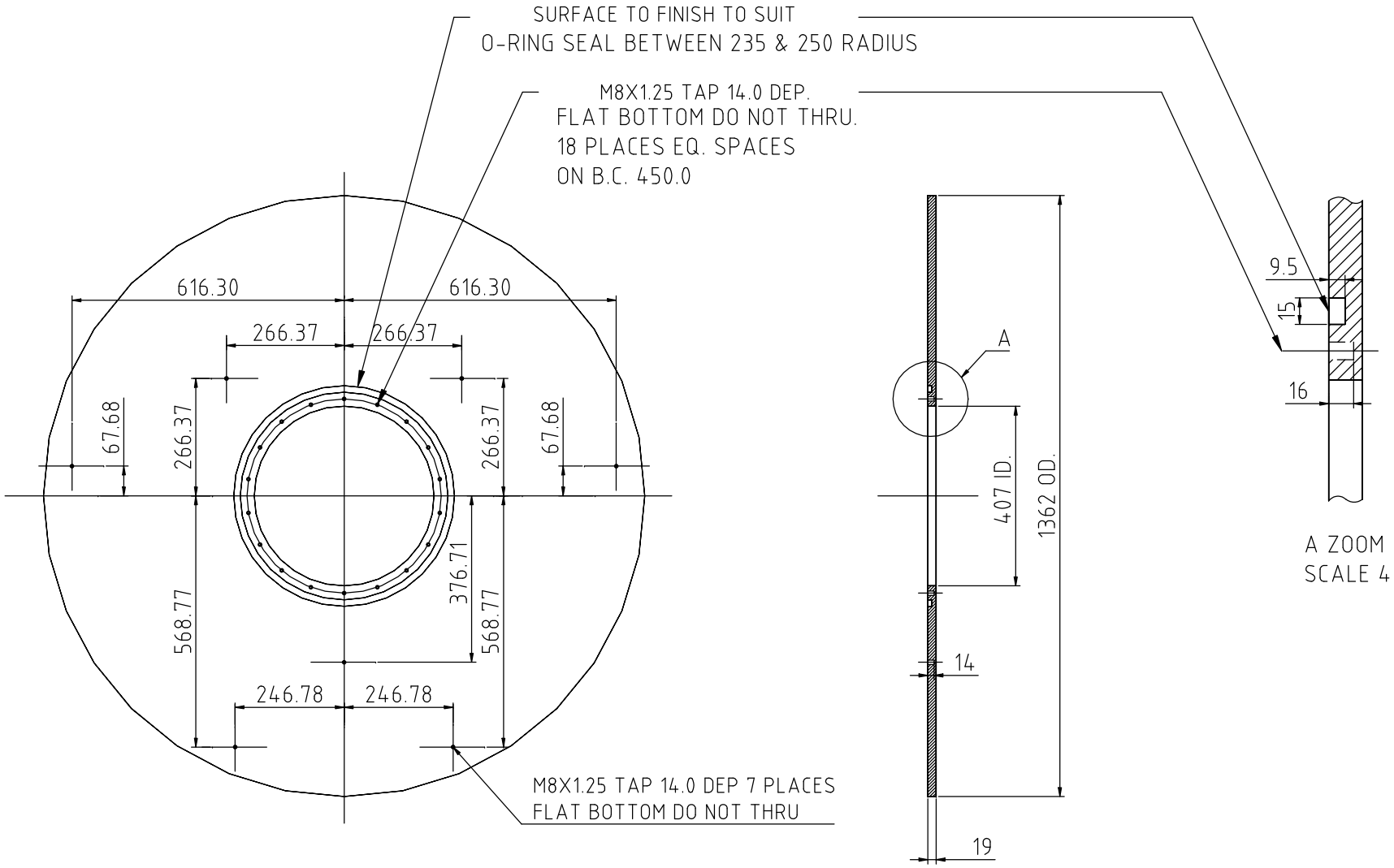

SCOPE OF WORK:

(1) WE SUPPLY 3/4" THICK PLATE WITH
ID=407-3mm OD=1362+3mm TO MACHINE
ID=407iÀ0.2mm OD=1362iÀ0.2mm

(2) MACHINE ORING GROOVP + TAP M8x1.25

(3) TAP M8 HOLE AS SHOW, DEPTH=14mm

NOTES:

1) DIMENSIONS ARE IN mm
2) MATERIAL IS 3/4" THK. 304 S.S. PLATE
3) QTY. 2

ALL DIMENSIONS ARE IN mm
TOLERANCES: DECIMALS XXX=±.005 XX=±.01 X=±.1
ANGLES ±.5°
CONCENTRICITY ±.1 TOTAL INDICATION RUN OUT
PERPENDICULAR ±.05
(UNLESS OTHERWISE SPECIFIED)

THIRD ANGLE PROJECTION

WANG NMR INC

550 N CANYONS PARKWAY, LIVERMORE, CA 94550

NAME: FRONT END PLATE			
DWG #: MICE - 3300B		SHT 1 OF 1	
MATERIAL: 304 STAINLESS STEEL		QTY	2
DWN BY: XU	DATE: NOV 15,2007	SCALE: TO FIT	DWG SIZE:
1ST CHK:	DATE:	2ND CHK:	DATE: