REQ	ITEM	PART NUMBER	DESCRIPTION
			COPPER ROD

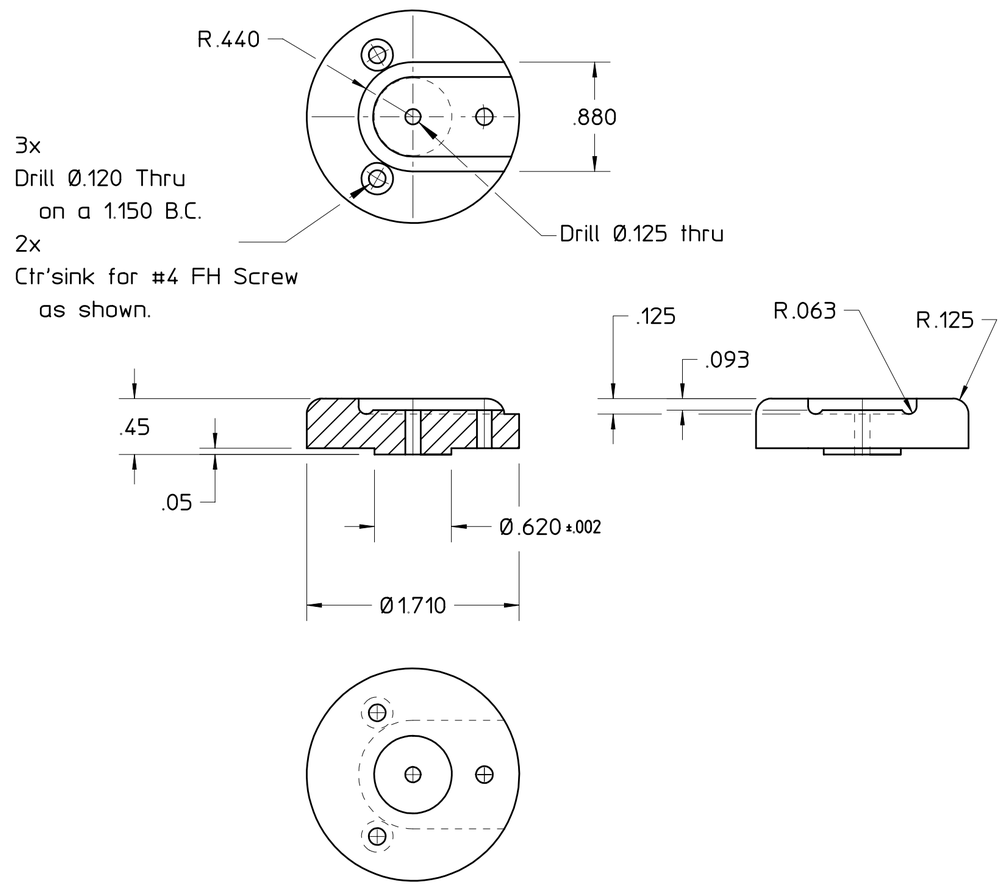

27B7773

REV	DWG	CHK	ZONE	DATE	CHANGES

UNLESS OTHERWISE SPECIFIED

TOLERANCES		
	.X ± -	FRAC. ±1/64
	.XX ± .01	ANGLES ±.01°
	.XXX ± .005	FINISH 125√

THREADS ARE CLASS 2
CHAMFER ENDS OF ALL SCREW THREADS 30°.
CUT 1.5 PITCH THRD RELIEF WITH ROUND NOSE TOOL
ON MACHINE CUT THREADS.
BREAK EDGES .016 MAX. ON MACHINED WORK
REMOVE BURRS WELD SPLATTER & LOOSE SCALE
REFERENCES: ANSI Y14.5 & B46.1.

SHOP ORDERS

ACCT. NO.	SERIAL NO.	
DATE ISSD	DATE REQD.	NO. REQD.
DELIVER TO		
SURFACE TREATMENT	UHV CLEAN	
IDENT. METH.	–	
DWG. BY	MACGILL	DATE 9-16-04
CHK. BY	–	DATE –

LAWRENCE BERKELEY LABORATORY
UNIVERSITY OF CALIFORNIA-BERKELEY

MUON COLLIDER

201 MHz MUON CAVITY PROTOTYPE

COUPLING LOOP - LOOP-HUB

PATENT CLEAR	DWG. TYPE	SHOWN ON	SCALE	DO NOT SCALE PRINTS
	DETAIL	27B7803	FULL	
MICROFILMED	DESIGN ACCT. NO.	CATEGORY CODE	DWG. NO.	SIZE / REV.
	UC4270	250003	27B7773	–