| REQ | ITEM | PART NUMBER | DESCRIPTION |
|---|---|---|---|
| 1 | 1 | - | O-Ring, 2-243 Silicone |
| 8 | 2 | - | Washer, 1/4 x .50 OD x .055 thick, SS |
| 8 | 3 | - | Hex Head Bolt, 1/4-20 x .75, SS, Drilled Head |
| 1 | 4 | - | Washer, 1/4, std, SS |
| 1 | 5 | - | SH Bolt, 1/4-28 x .75, SS |
| 1 | 6 | 27B8212 | RF Adapter-Inner Conductor |
| 1 | 7 | 27B8204 | RF Adapter-Outer Conductor |
| 2 | 8 | - | O-Ring, Myat # 401-01 |
| 8 | 9 | - | Washer, 3/8 x .625 OD x .06 thick, SS |
| 8 | 10 | - | Hex Head Bolt, 3/8-16 x 1.00, SS, Drilled Head |
| 1 | 11 | - | Anchor Insulator Connector, Myat # 401-010 |
| 1 | 12 | 27B8241 | RF Spool - Inner conductor |
| 1 | 13 | 27B8234 | RF Spool - Outer conductor |
| 2 | 14 | - | Wire, Ø.050 SS, Anealed |
| 1 | A | - | Coupling Loop/RF Window Assembly |
| 1 | B | - | Mating 4 1/16 Coax Component |

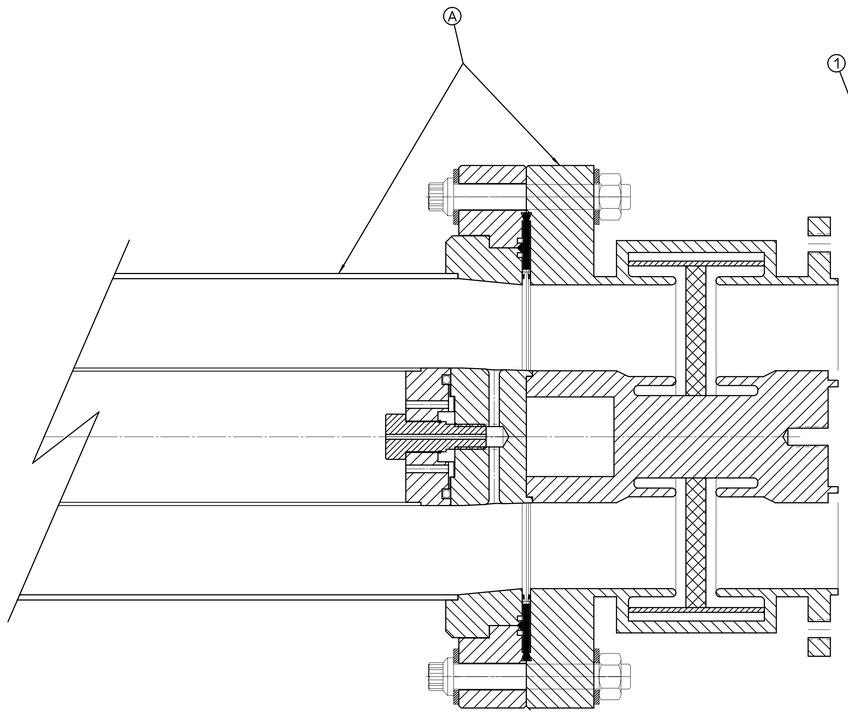


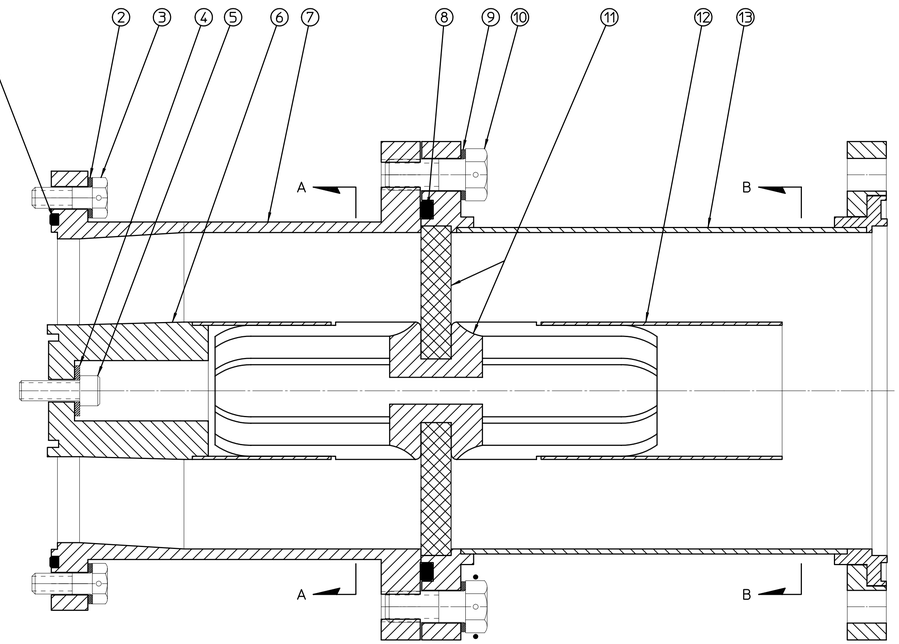


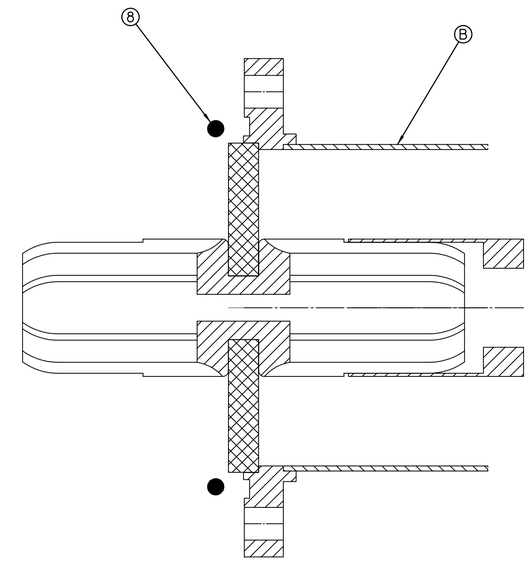


27B8194

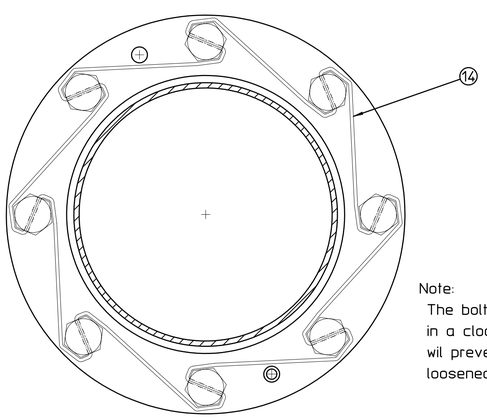


Note:
The bolt heads are wired together in a clocking pattern that wil prevent them from being loosened.

SECTION A-A & B-B
Not to scale

| REV | DWG | CHK | ZONE | DATE | CHANGES |
|---|---|---|---|---|---|

UNLESS OTHERWISE SPECIFIED

| TOLERANCES | | |
|---|---|---|
| .X ± - | FRAC. ±1/64 | |
| .XX ± - | ANGLES ± 1° | |
| .XXX ± - | FINISH 125√ | |

THREADS ARE CLASS 2
CHAMFER ENDS OF ALL SCREW THREADS 30°
CUT 1.5 PITCH THRD RELIEF WITH ROUND NOSE TOOL ON MACHINE CUT THREADS.
BREAK EDGES .016 MAX. ON MACHINED WORK
REMOVE BURRS WELD SPLATTER & LOOSE SCALE
REFERENCES: ANSI Y14.5 & B46.1.

SHOP ORDERS

| | | |
|---|---|---|
| ACCT. NO. | | SERIAL NO. |
| DATE ISSD | DATE REQD. | NO. REQD. |
| DELIVER TO | | |
| SURFACE TREATMENT | UHV CLEAN | |
| IDENT. METH. | - | |
| DWG BY | MACGILL | DATE 05-05-05 |
| CHK. BY | - | DATE - |

**LAWRENCE BERKELEY LABORATORY**
UNIVERSITY OF CALIFORNIA-BERKELEY

MUON COLLIDER

201 MHz MUON CAVITY PROTOTYPE

RF ADAPTER ASSEMBLY

| PATENT CLEAR | DWG. TYPE | SHOWN ON | SCALE | DO NOT SCALE PRINTS |
|---|---|---|---|---|
| | ASSEMBLY | - | FULL | |
| MICROFILMED | DESIGN ACCT. NO. | CATEGORY CODE | DWG. NO. | SIZE / REV. |
| | UC4269 | 250003 | 27B8194 | - |