REQ	ITEM	PART NUMBER	DESCRIPTION
			3/8" ALUMINUM PLATE

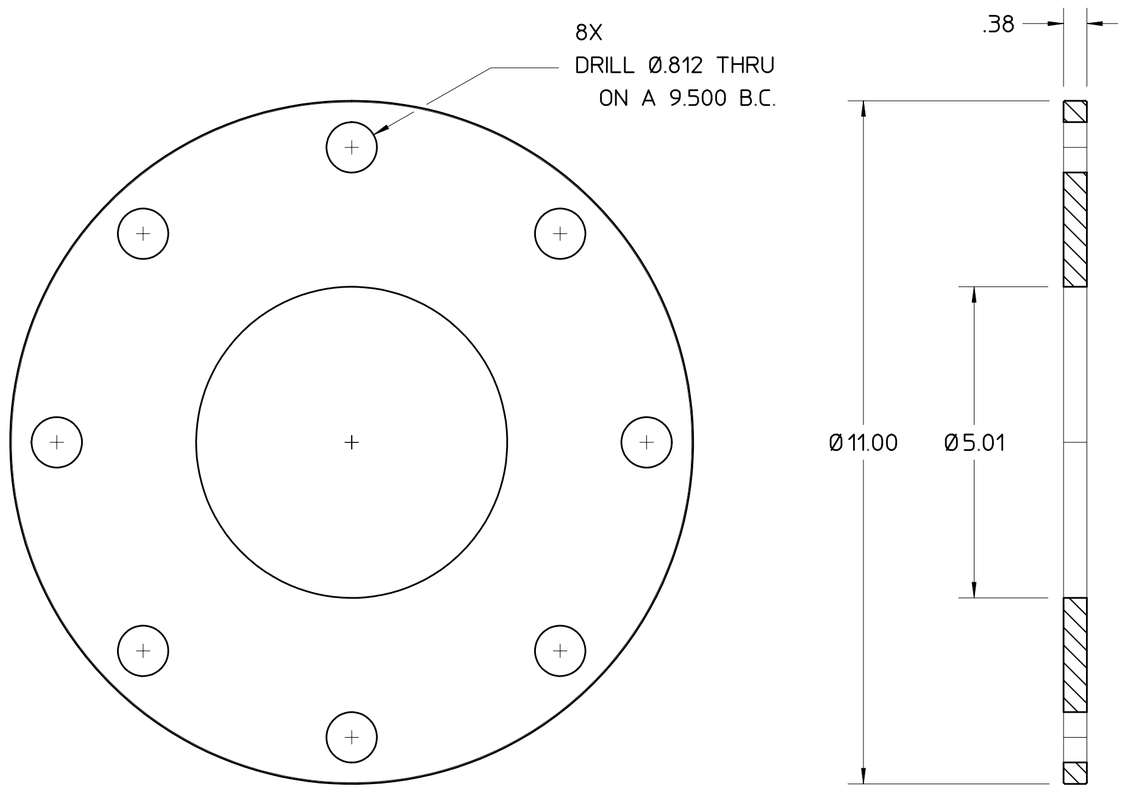

27B8183

REV	DWG	CHK	ZONE	DATE	CHANGES

UNLESS OTHERWISE SPECIFIED

TOLERANCES

.X ± .1	FRAC. ±1/64
.XX ± .01	ANGLES ±.01°
.XXX ± .005	FINISH 125√

THREADS ARE CLASS 2
CHAMFER ENDS OF ALL SCREW THREADS 30°.
CUT 1.5 PITCH THRD RELIEF WITH ROUND NOSE TOOL
ON MACHINE CUT THREADS.
BREAK EDGES .016 MAX. ON MACHINED WORK
REMOVE BURRS WELD SPLATTER & LOOSE SCALE
REFERENCES: ANSI Y14.5 & B46.1.

SHOP ORDERS

ACCT. NO.	SERIAL NO.	
DATE ISSD	DATE REQD.	NO. REQD.
DELIVER TO		
SURFACE TREATMENT UHV CLEAN		
IDENT. METH. –		
DWG. BY MACGILL	DATE 04-01-05	
CHK. BY –	DATE –	

LAWRENCE BERKELEY LABORATORY
UNIVERSITY OF CALIFORNIA-BERKELEY

MUON COLLIDER
201 MHz MUON CAVITY PROTOTYPE
MAKEUP FLANGE-PUMP/VALVE

PATENT CLEAR	DWG. TYPE	SHOWN ON	SCALE	DO NOT SCALE PRINTS
	DETAIL	–	HALF	
MICROFILMED	DESIGN ACCT. NO.	CATEGORY CODE	DWG. NO.	SIZE / REV.
	UC4269	250003	27B8183	–