REQ	ITEM	PART NUMBER	DESCRIPTION
3	1	MDC 401002	Half Nipple, 2 3/4 Conflat
1	2	MDC 401006	Half Nipple, 6 Conflat
3	3	MDC 401021	Half Nipple, Mini Conflat
1	4	MDC 100028	Flange, Conflat, 6 3/4, Rotatable

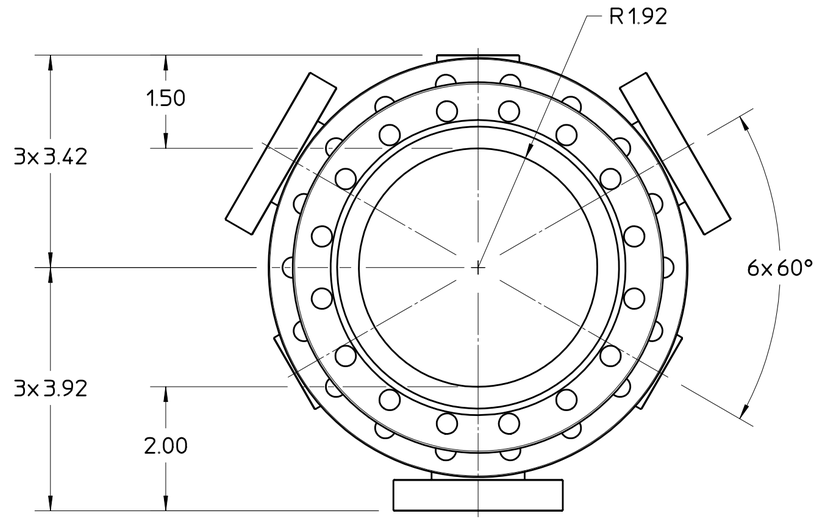

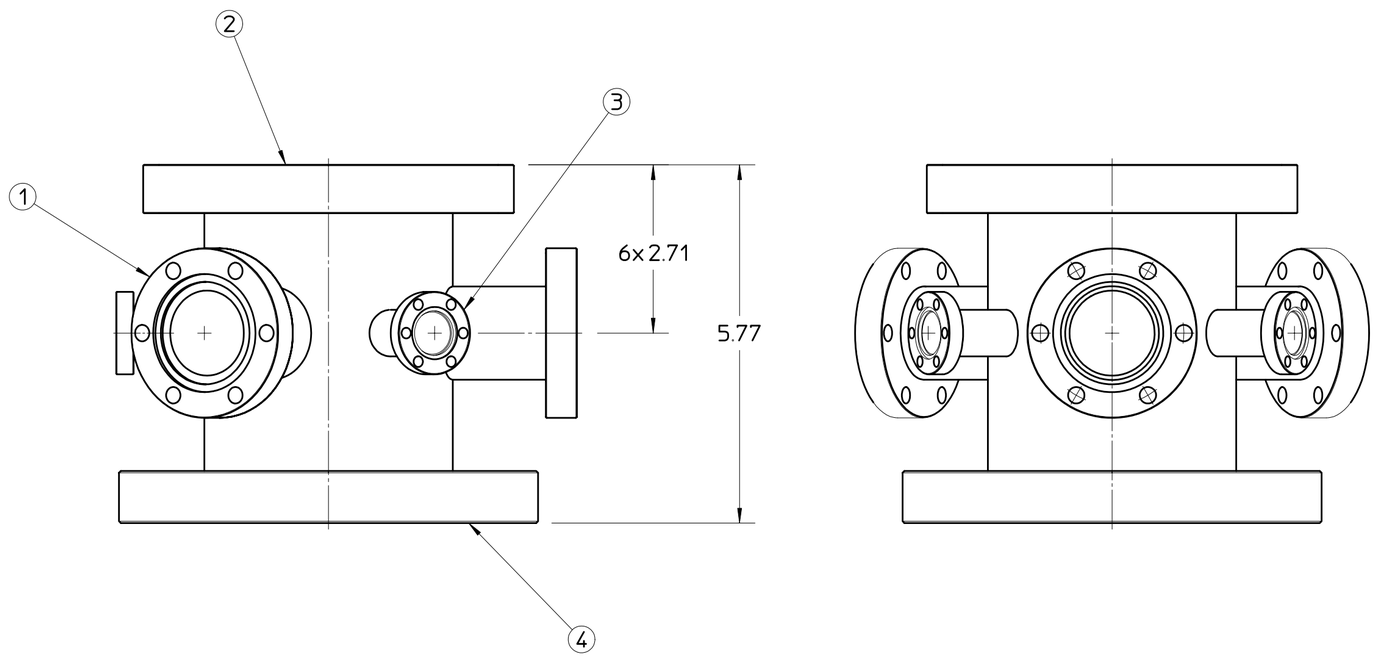

27B8173

NOTE:
PARTS WELDED TOGETHER
'VAC TIGHT'

REV	DWG	CHK	ZONE	DATE	CHANGES

UNLESS OTHERWISE SPECIFIED

TOLERANCES			
	.X ± -	FRAC. ±1/64	
	.XX ± .01	ANGLES ±.01°	
	.XXX ± -	FINISH 125√	

THREADS ARE CLASS 2
CHAMFER ENDS OF ALL SCREW THREADS 30°.
CUT 1.5 PITCH THRD RELIEF WITH ROUND NOSE TOOL ON MACHINE CUT THREADS.
BREAK EDGES .016 MAX. ON MACHINED WORK
REMOVE BURRS WELD SPLATTER & LOOSE SCALE
REFERENCES: ANSI Y14.5 & B46.1.

SHOP ORDERS

ACCT. NO.	SERIAL NO.	
DATE ISSD	DATE REQD.	NO. REQD.
DELIVER TO		
SURFACE TREATMENT	ELECTRO POLISH-UHV CLEAN	
IDENT. METH.	-	
DWG. BY	MACGILL	DATE 03-09-05
CHK. BY	-	DATE -

LAWRENCE BERKELEY LABORATORY
UNIVERSITY OF CALIFORNIA-BERKELEY

MUON COLLIDER

201 MHz MUON CAVITY PROTOTYPE

DIAGNOSTIC SPOOL

PATENT CLEAR	DWG. TYPE	SHOWN ON	SCALE	DO NOT SCALE PRINTS
	ASSEMBLY	-	HALF	
MICROFILMED	DESIGN ACCT. NO.	CATEGORY CODE	DWG. NO.	SIZE / REV.
	UC4269	250003	27B8173	-