REQ	ITEM	PART NUMBER	DESCRIPTION
1	1	27B7773	LOOP - HUB
1	2	27B7793	LOOP - SUPPORT WEB
1	3	27B7783	LOOP - TUBE

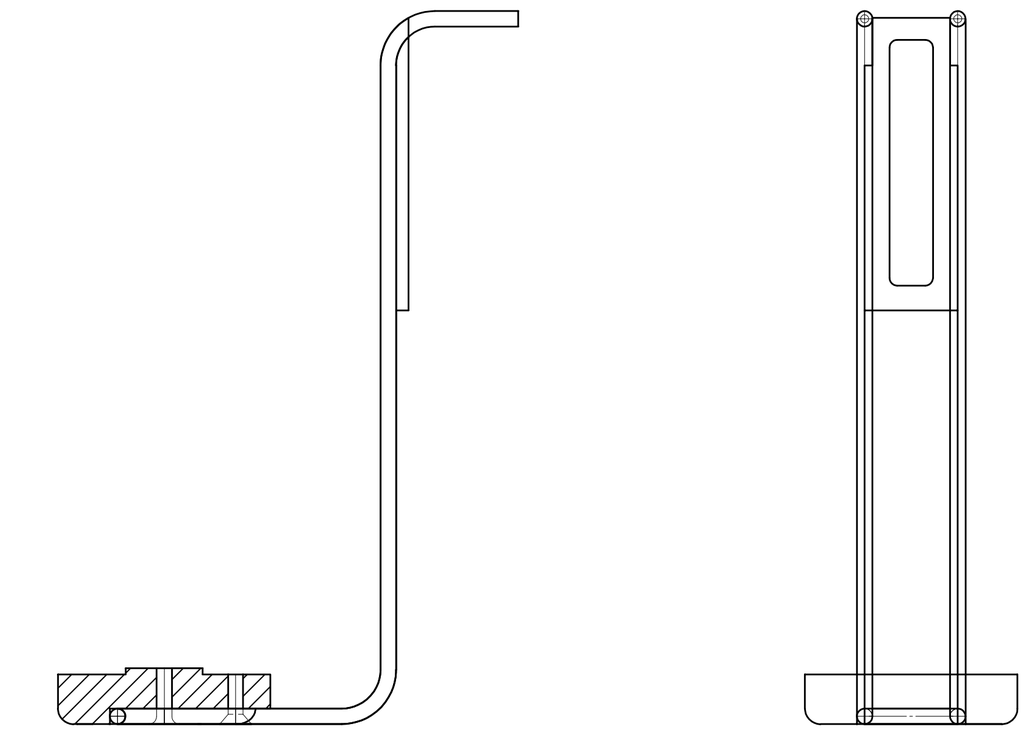

27B7803

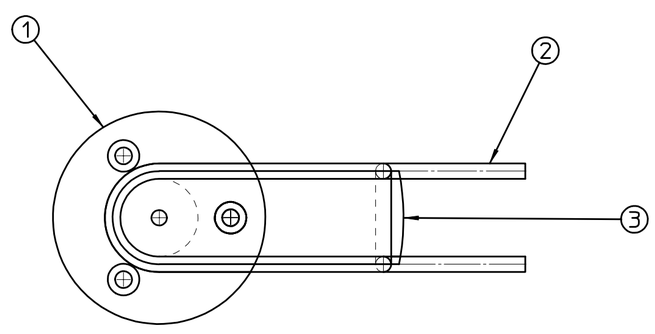

NOTE:
ITEMS HARD SOLDERED TOGETHER

REV	DWG	CHK	ZONE	DATE	CHANGES

UNLESS OTHERWISE SPECIFIED

TOLERANCES			
	.X ± -	FRAC. ±1/64	
	.XX ± -	ANGLES ±.01°	
	.XXX ± -	FINISH 125√	

THREADS ARE CLASS 2
CHAMFER ENDS OF ALL SCREW THREADS 30°.
CUT 1.5 PITCH THRD RELIEF WITH ROUND NOSE TOOL
ON MACHINE CUT THREADS.
BREAK EDGES .016 MAX. ON MACHINED WORK
REMOVE BURRS WELD SPLATTER & LOOSE SCALE
REFERENCES: ANSI Y14.5 & B46.1.

SHOP ORDERS

ACCT. NO.	SERIAL NO.	
DATE ISSD	DATE REQD.	NO. REQD.
DELIVER TO		
SURFACE TREATMENT	UHV CLEAN	
IDENT. METH.	-	
DWG. BY	MACGILL	DATE 9-17-04
CHK. BY	-	DATE -

LAWRENCE BERKELEY LABORATORY
UNIVERSITY OF CALIFORNIA-BERKELEY

MUON COLLIDER

201 MHz MUON CAVITY PROTOTYPE

COUPLING LOOP- LOOP SUBASSEMBLY

PATENT CLEAR	DWG. TYPE	SHOWN ON	SCALE	DO NOT SCALE PRINTS
	ASSEMBLY	-	FULL	
MICROFILMED	DESIGN ACCT. NO.	CATEGORY CODE	DWG. NO.	SIZE / REV.
	UC4270	250003	27B7803	-