| REQ | ITEM | PART NUMBER | DESCRIPTION |
|---|---|---|---|
| | | | .080 THK HALF HARD OFE CU |
| | | | ASTM F68 MET CLASS 1 |
| | | | |
| | | | |

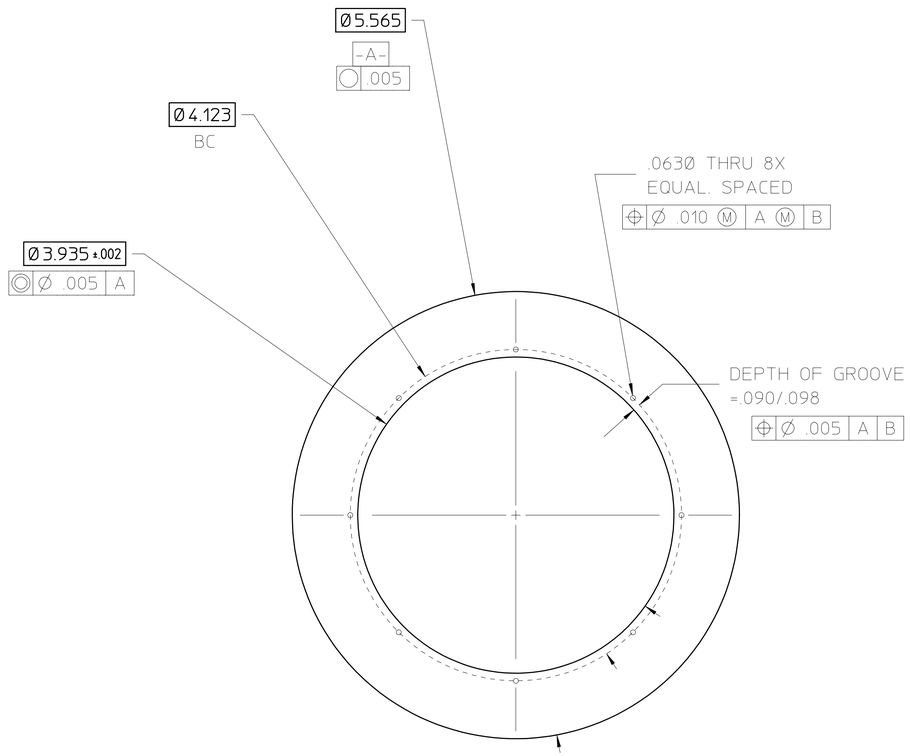


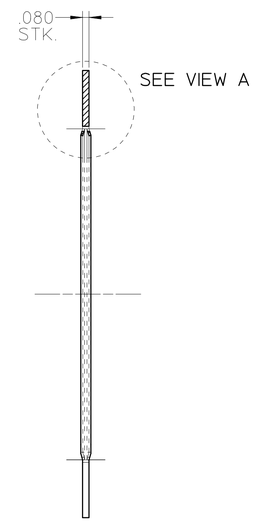


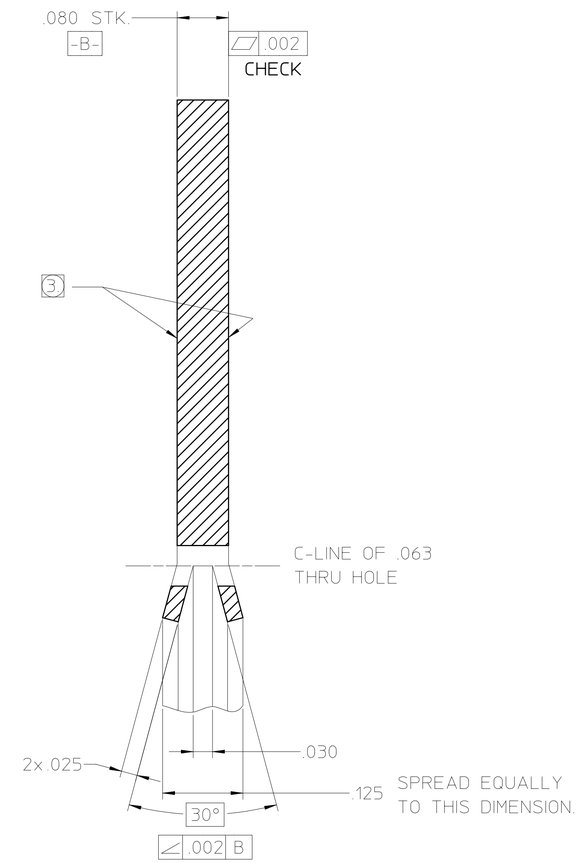


VIEW A

SCALE: 8X

27B7764

NOTES:

1. DEBURR ALL EDGES AFTER MACHINING
2. USE ONLY MACHINING FLUIDS APPROVED FOR UHV USE.
3. THESE SURFACES SHALL BE KEPT FREE FROM SCRATCHES, NICKS OR BURRS DURING HANDLING.
4. UHV CLEAN AFTER MACHINING AND WRAP IN LINT FREE PAPER AND HV ALUM. FOIL.

| REV | DWG | CHK | ZONE | DATE | CHANGES |
|---|---|---|---|---|---|

UNLESS OTHERWISE SPECIFIED

TOLERANCES: .X ± - | FRAC. ± ~ | .XX ± .015 | ANGLES ± .05° | .XXX ± .005 | FINISH 32 √

THREADS ARE CLASS 2
CHAMFER ENDS OF ALL SCREW THREADS 30°.
CUT 1.5 PITCH THRD RELIEF WITH ROUND NOSE TOOL ON MACHINE CUT THREADS.
BREAK EDGES .016 MAX. ON MACHINED WORK
REMOVE BURRS WELD SPLATTER & LOOSE SCALE
REFERENCES: ANSI Y14.5 & B46.1.

SHOP ORDERS

| | | | |
|---|---|---|---|
| ACCT. NO. | | SERIAL NO. | |
| DATE ISSD. | DATE REQD. | NO. REQD. | |
| DELIVER TO | | | |
| SURFACE TREATMENT | SEE NOT 4. | | |
| IDENT. METH. | TAG | | |
| DWG. BY | MACGILL | DATE | 08-23-04 |
| CHK. BY | - | DATE | - |

**LAWRENCE BERKELEY LABORATORY**
UNIVERSITY OF CALIFORNIA-BERKELEY

MUON COLLIDER

201 MHz MUON CAVITY PROTOTYPE

SERF SEAL-CAVITY PORT

| PATENT CLEAR | DWG. TYPE | SHOWN ON | SCALE | DO NOT SCALE PRINTS |
|---|---|---|---|---|
| | CD | ~ | FULL | |
| MICROFILMED | DESIGN ACCT. NO. | CATEGORY CODE | DWG. NO. | SIZE / REV. |
| | UC4269 | 250003 | 27B7764 | - |