REQ	ITEM	PART NUMBER	DESCRIPTION
			316 STAINLESS STEEL PLATE

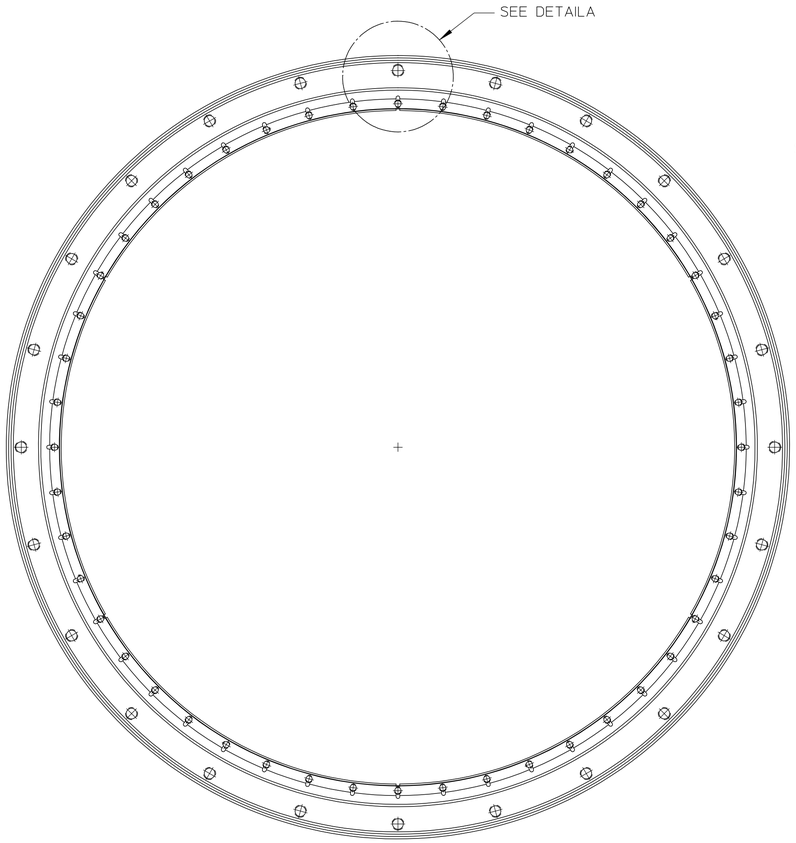

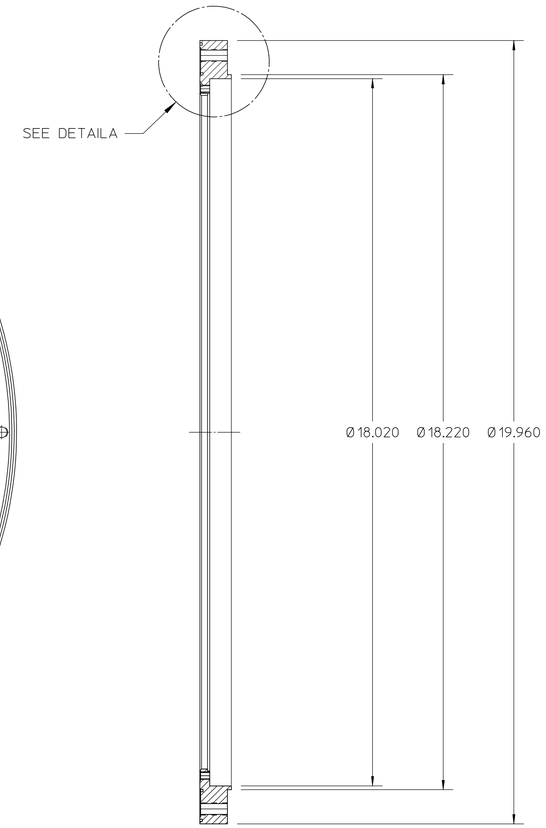

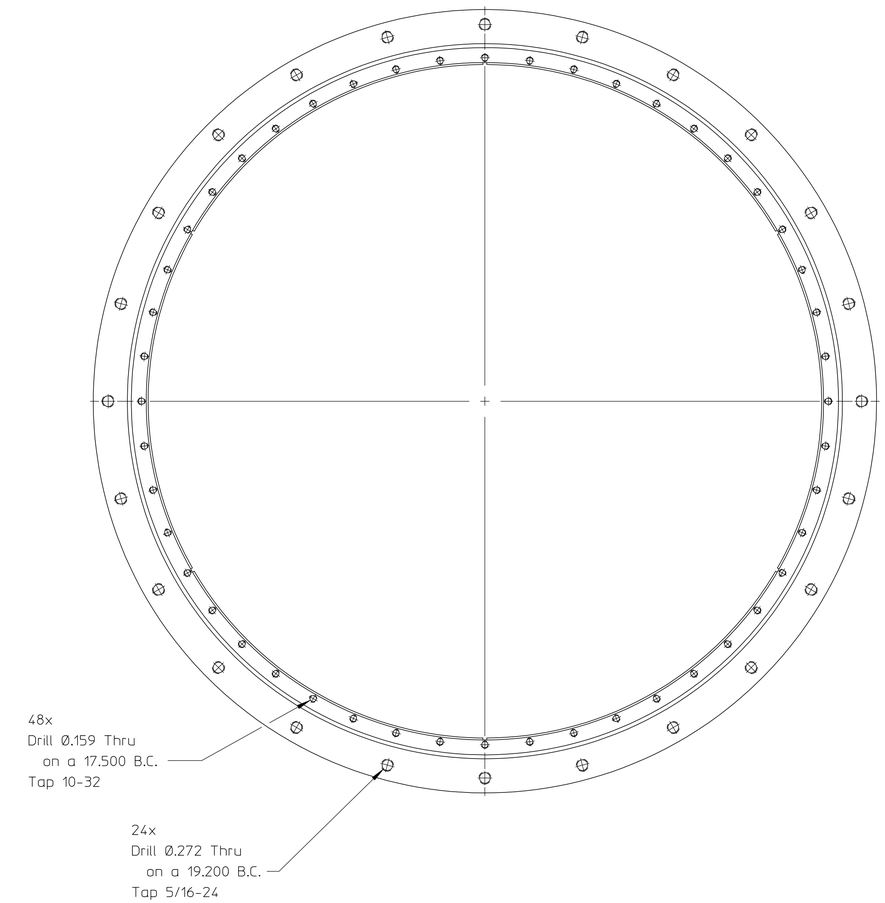

2506524

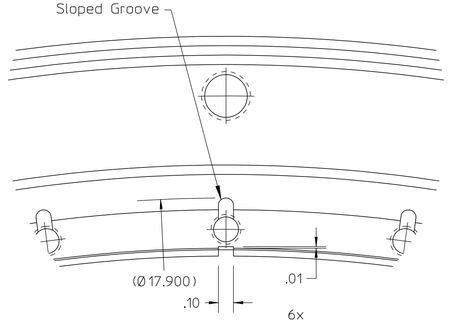

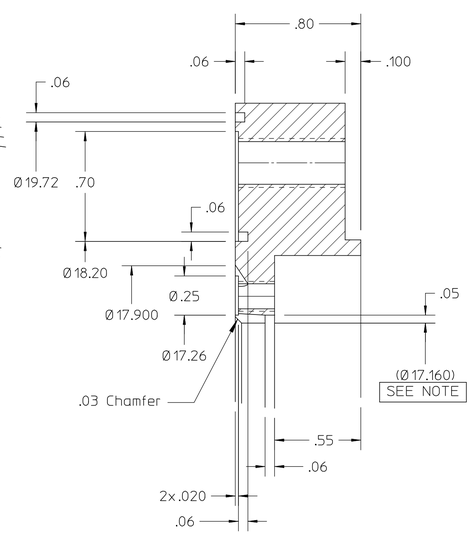

DETAIL A
SCALE: 2X

NOTE:
Absolute dimension of Inside Diameter (Ø17.160) is not as important as it's relative size to it's mating part 250xxx. This diameter must be .008 to .012" larger than NOTED diameter B.

REV	DWG	CHK	ZONE	DATE	CHANGES

UNLESS OTHERWISE SPECIFIED
TOLERANCES: .X ± .1 — FRAC. ± 1/64; .XX ± .01 — ANGLES ± 1°; .XXX ± .005 — FINISH 63 √
THREADS ARE CLASS 2
CHAMFER ENDS OF ALL SCREW THREADS 30°.
CUT 1.5 PITCH THRD RELIEF WITH ROUND NOSE TOOL ON MACHINE CUT THREADS.
BREAK EDGES .016 MAX. ON MACHINED WORK
REMOVE BURRS WELD SPLATTER & LOOSE SCALE
REFERENCES: ANSI Y14.5 & B46.1.

SHOP ORDERS
ACCT. NO. | SERIAL NO.
DATE ISSD | DATE REQD. | NO. REQD.
DELIVER TO
SURFACE TREATMENT DEGREASE
IDENT. METH. -
DWG. BY MACGILL — DATE 01-09-04
CHK. BY - — DATE -

LAWRENCE BERKELEY LABORATORY
UNIVERSITY OF CALIFORNIA-BERKELEY

MUON COLLIDER
201 MHz CAVITY PROTOTYPE
NOSE RING-STAINLESS STEEL

PATENT CLEAR	DWG. TYPE	SHOWN ON	SCALE	DO NOT SCALE PRINTS
	CD	250636	HALF	
MICROFILMED	DESIGN ACCT. NO.	CATEGORY CODE	DWG. NO.	SIZE / REV.
	UC4270	250003	2506524	-