DESCRIPTION	MATERIAL
60" DIAMETER X 0.25" THICK DISK	C10100 HR OXYGEN-FREE COPPER

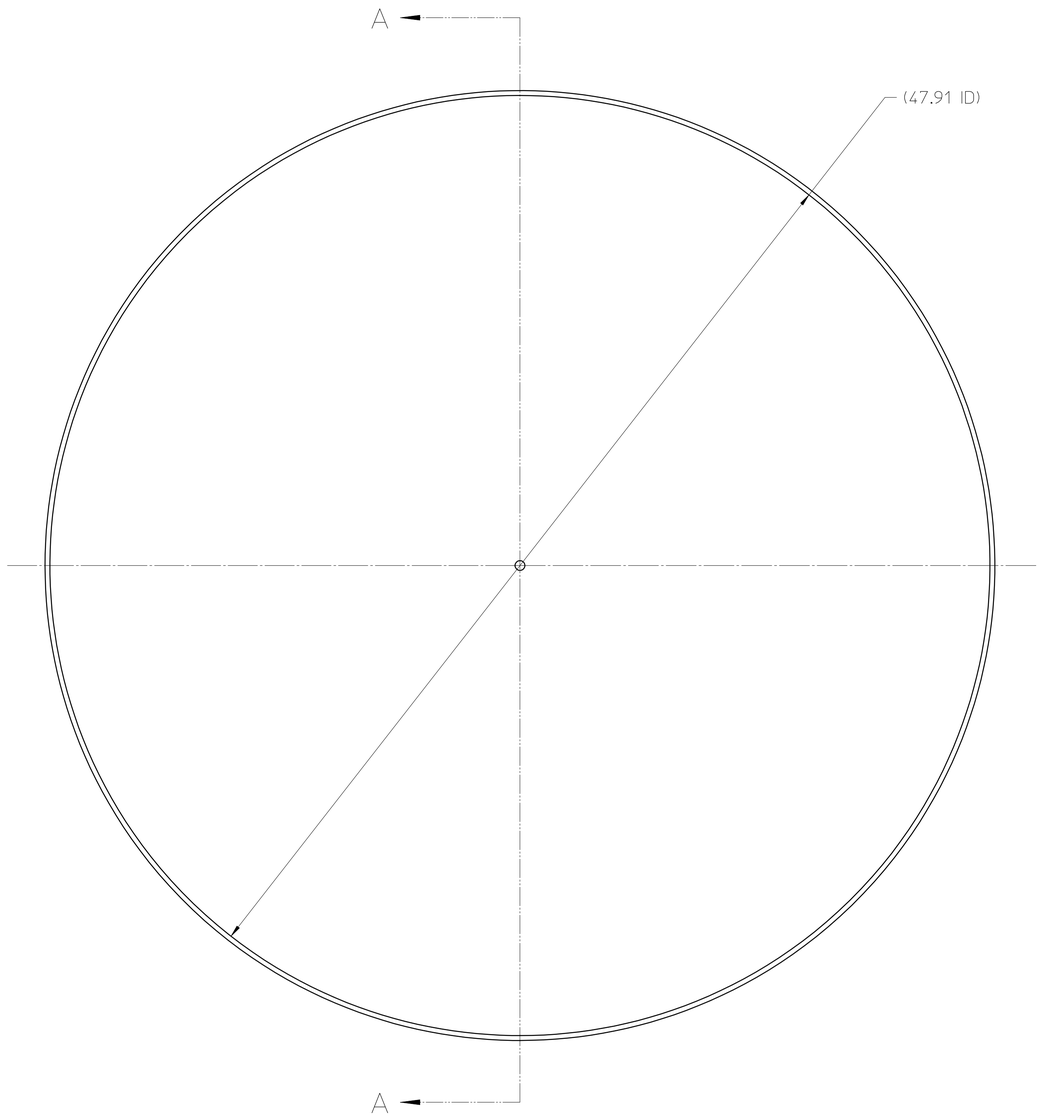

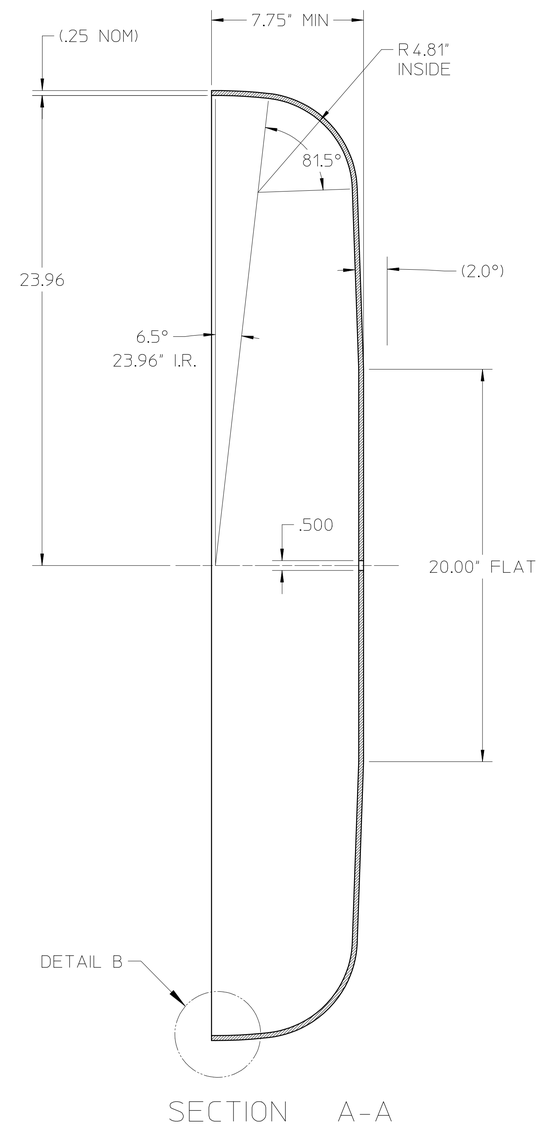

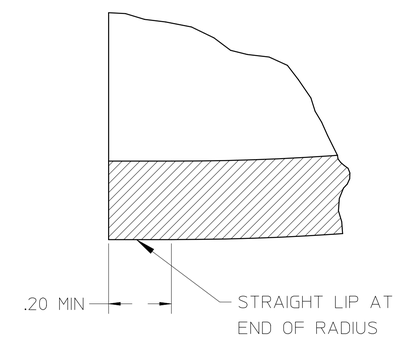

DETAIL B
SCALE 4:1

2506364

NOTES:

1. ALL DIMENSIONS ARE INCHES.
2. ALL PART FEATURES AND DIMENSIONS ARE SYMMETRIC ABOUT PART AXIS.
3. MATERIAL THICKNESS BEFORE SPINNING IS NOMINALLY .25". SOME THINNING OF MATERIAL IS EXPECTED DURING SPINNING.

REV	DWG	CHK	ZONE	DATE	CHANGES

UNLESS OTHERWISE SPECIFIED

TOLERANCES			
.X ± .2	FRAC. ± 1/64		
.XX ± .125	ANGLES ± 1°		
.XXX ± .020	FINISH 125		

THREADS ARE CLASS 2
CHAMFER ENDS OF ALL SCREW THREADS 30°.
CUT 1.5 PITCH THRD RELIEF WITH ROUND NOSE TOOL ON MACHINE CUT THREADS.
BREAK EDGES .016 MAX. ON MACHINED WORK
REMOVE BURRS WELD SPLATTER & LOOSE SCALE
REFERENCES: ANSI Y14.5 & B46.1.

SHOP ORDERS

ACCT. NO.	SERIAL NO.	
DATE ISSD	DATE REQD.	NO. REQD.
DELIVER TO		
SURFACE TREATMENT DEGREASE		
IDENT. METH. -		
DWG. BY S. VIROSTEK	DATE 07-24-03	
CHK. BY S. VIROSTEK	DATE 07-24-03	

LAWRENCE BERKELEY LABORATORY
UNIVERSITY OF CALIFORNIA-BERKELEY

201.5 MHZ RF CAVITY PROTOTYPE

CAVITY BODY COMPONENTS

CAVITY HALF-SHELL SPINNING

PATENT CLEAR	DWG. TYPE	SHOWN ON	SCALE 1/4	DO NOT SCALE PRINTS
	PART			
MICROFILMED	DESIGN ACCT. NO. 72MC-C5	CATEGORY CODE ---	DWG. NO. 2506364	SIZE / REV. -