标记	处数	更改文件号	签 字	日 期

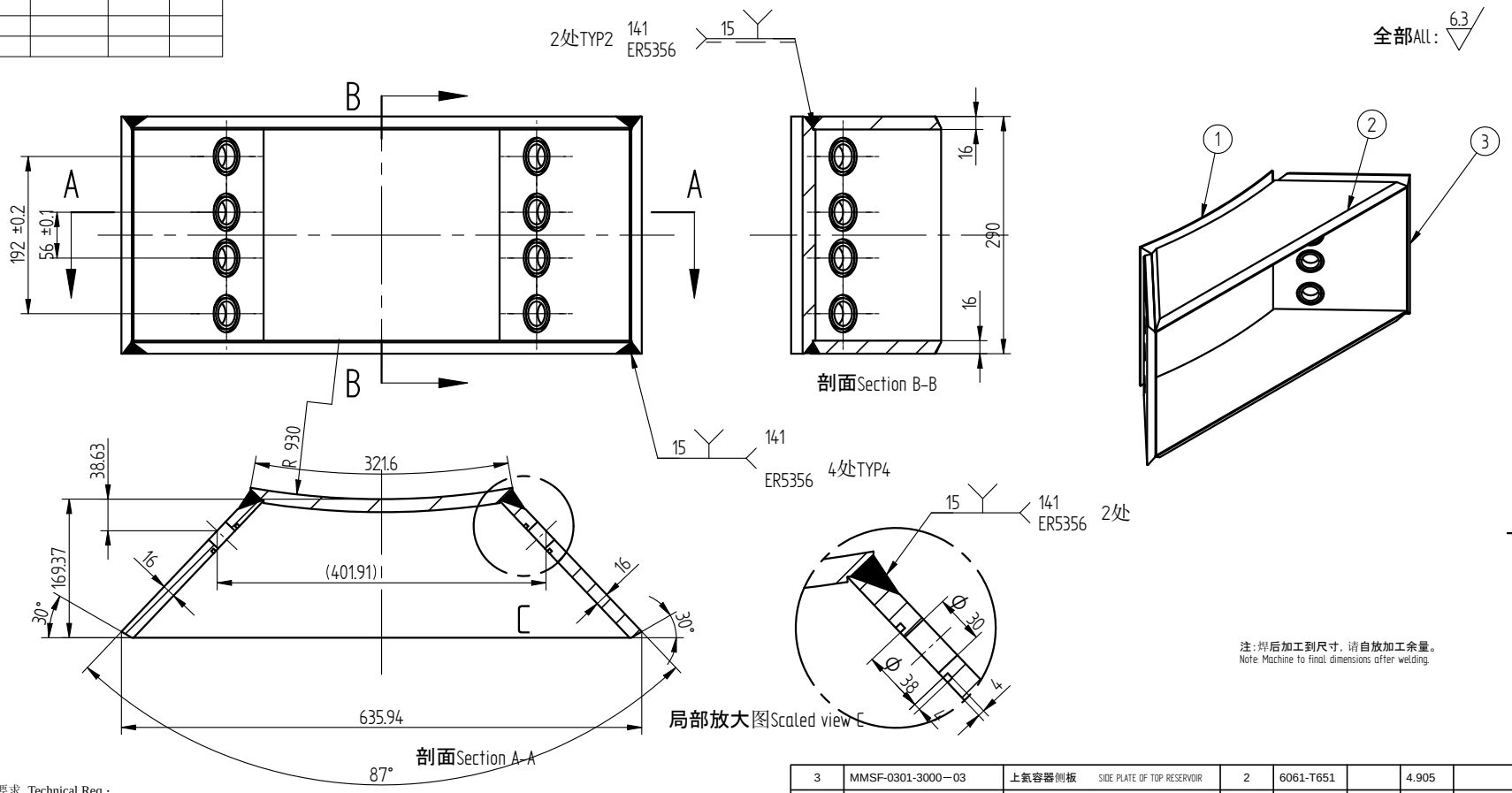

注：焊后加工到尺寸，请自放加工余量。
Note: Machine to final dimensions after welding.

技术要求 Technical Req.:

1. 提供材质证明书 Material properties certificate shall be provided.
2. 焊缝为全焊透形式，焊后不得有气孔、裂缝等影响强度的缺陷；按 JB4730 对焊缝进行射线无损检查，II 级为合格。Welding seam shall be fully penetrated, X ray inspect all seamwelding and shall be graded II.
3. 焊后再精加工各外侧表面和孔.Finish all surface and drill holes after welding.
4. 各元件在焊前进行清洁处理，去除油污、污垢、灰尘等烘干或吹干，并保持干燥；清洗和焊接参照工艺文件“MICE 冷质量和低温恒温器清洗及焊接程序”。Comply to “Cleaning and Welding Prcedure for MICE Cold Mass and Cryostat” clean all parts before welding and keep dry.
5. 未注尺寸公差按 GB/T 1804-2000 f 级，未注形位公差按 GB/T 1184-1996 k 级进行制造。See title box for un-marked tolerancles.
6. 容器需经压力试验：试验介质为干燥氮气，试验压力为 0.5MPa,试验方法参见 GB150。Comply to GB150, Dry Nitrogen gas with 0.5Mpa pressure test.
7. 容器压力测试后经氦质谱仪常温和液氮温度检漏，每道焊缝漏率应小于 1×10^{-10}Pa.m^3/S,检漏方法见“MICE 冷质量和低温恒温器真空检漏程序”。 After pressure check, He leak detector check all welding seems under room and L He temperature, the leakage shall be less than 1×10-10Pa•m3/S . Comply to “Vacuum Leak Check Procedure for MICE Cold Mass and Cryostat”.
8. 6061 铝采用氩弧焊，焊丝牌号 ER5356. Al 6061 parts shall be welded with argon-arc welding method and solder ER6356.

序号	代号	名称	数量	材料	单重	总重	备注
3	MMSF-0301-3000－03	上氦容器侧板 SIDE PLATE OF TOP RESERVOIR	2	6061-T651		4.905	
2	MMSF-0301-3000－02	上氦容器端板 END PLATE OF TOP RESERVOIR	2	6061-T651		5.904	
1	MMSF-0301-3000－01	上氦容器底板 BOTTOM PLATE OF TOP RESERVOIR	1	6061-T651		3.605	

设 计						SSRF上海光源
绘 图						
校 核						冷质量及冷却组件
审 核			计算机文件名	MMSF-0301-3000-00A.dft		
会 签			制图软件	Solid Edge		上氦容器
			数 量	重 量	比 例	图 幅
审 定			1	14.41	1:5	A3
批 准			共 1 张		第 张	

MMSF-0301-3000－00 版本 A

REV	AUTHOR	APPROVER	DATE	CHANGE DESCRIPTION
A				INITIAL REVISION

UNLESS OTHERWISE SPECIFIED
TOLERANCES: .0± .25 .00±.125 .000±.050
FRACTIONS: ± -/--
ANGLES: ± -.-°/MM
MACH. SURFS.: 125 ✓ OR BETTER
REF:ASME Y14.5M-1994, THREADS ARE CLASS 2
BREAK EDGES .016 MAX. ON MACHINED WORK
REMOVE BURRS, WELD SPLATTER & LOOSE SCALE

PROJECT NAME: MICE
DO NOT SCALE PRINT
SCALE: 1:1
CATEGORY CODE: MU 1025
FRIST ANGLE PROJECTION

ERNEST ORLANDO LAWRENCE BERKELEY NATIONAL LABORATORY
UNIVERSITY OF CALIFORNIA
MUON IONIZATION COOLING EXPERIMENT (MICE)
MICE/MUCOOL SUPERCONDUCTING COUPLING MAGNET
COLD MASS TOP RESERVOIR ASSEMBLY

SHEET 1 OF 1 | SIZE: 5 | DWG NO: 27H848 | REV A