REQ	ITEM	PART NUMBER	DESCRIPTION
			.75 x 2.00 ALUMINUM BAR 6061-T6

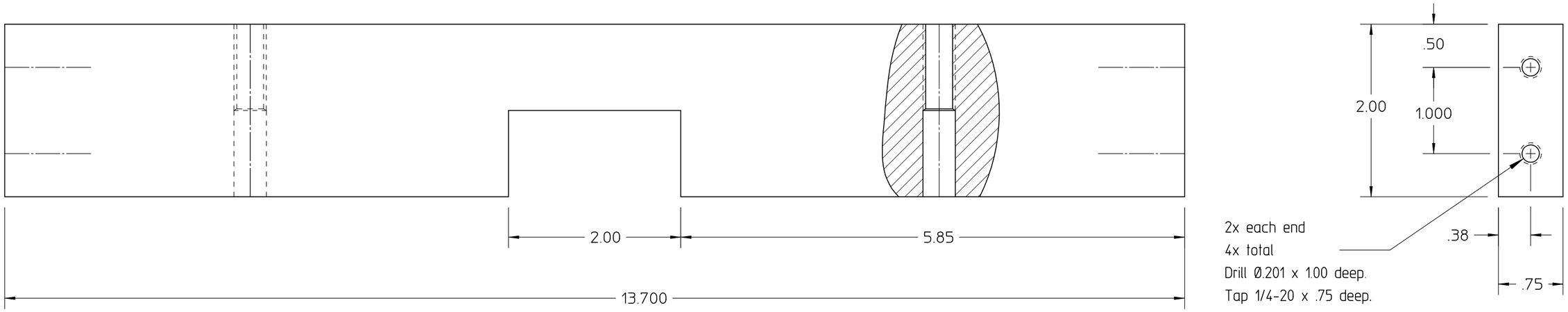

21K5463

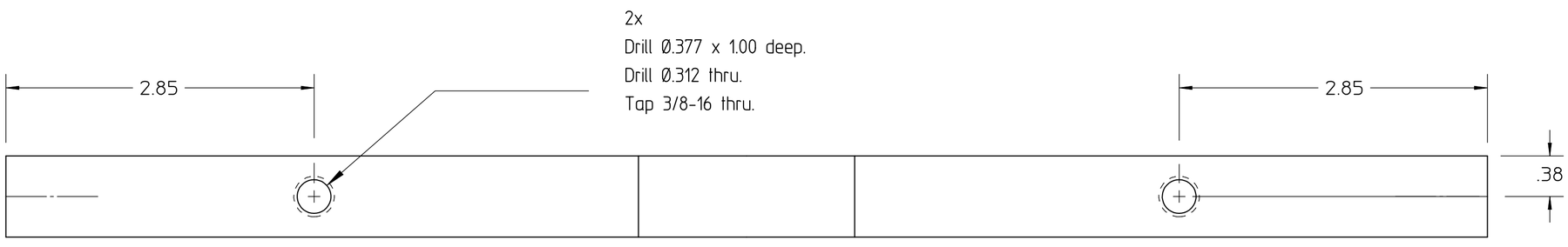

REV	DWG	CHK	ZONE	DATE	CHANGES

UNLESS OTHERWISE SPECIFIED

TOLERANCES			
	.X ± -	FRAC. ±1/64	
	.XX ± .01	ANGLES ±.01°	
	.XXX ± .005	FINISH 125√	

THREADS ARE CLASS 2
CHAMFER ENDS OF ALL SCREW THREADS 30°.
CUT 1.5 PITCH THRD RELIEF WITH ROUND NOSE TOOL ON MACHINE CUT THREADS.
BREAK EDGES .016 MAX. ON MACHINED WORK
REMOVE BURRS WELD SPLATTER & LOOSE SCALE
REFERENCES: ANSI Y14.5 & B46.1.

SHOP ORDERS

ACCT. NO.		SERIAL NO.
DATE ISSD	DATE REQD.	NO. REQD.
DELIVER TO		
SURFACE TREATMENT	DEGREASE	
IDENT. METH.	-	
DWG. BY	MACGILL	DATE 11-22-00
CHK. BY	-	DATE -

LAWRENCE BERKELEY LABORATORY
UNIVERSITY OF CALIFORNIA-BERKELEY

PLASMA APPLICATIONS GROUP

Mu COOL HP TEST CAVITY

CAVITY CARRIAGE CROSS BEAM

PATENT CLEAR	DWG. TYPE	SHOWN ON	SCALE	DO NOT SCALE PRINTS
	CD	21K5443	FULL	
MICROFILMED	DESIGN ACCT. NO.	CATEGORY CODE	DWG. NO.	SIZE / REV.
	72MCC2	PA0003	21K5463	-