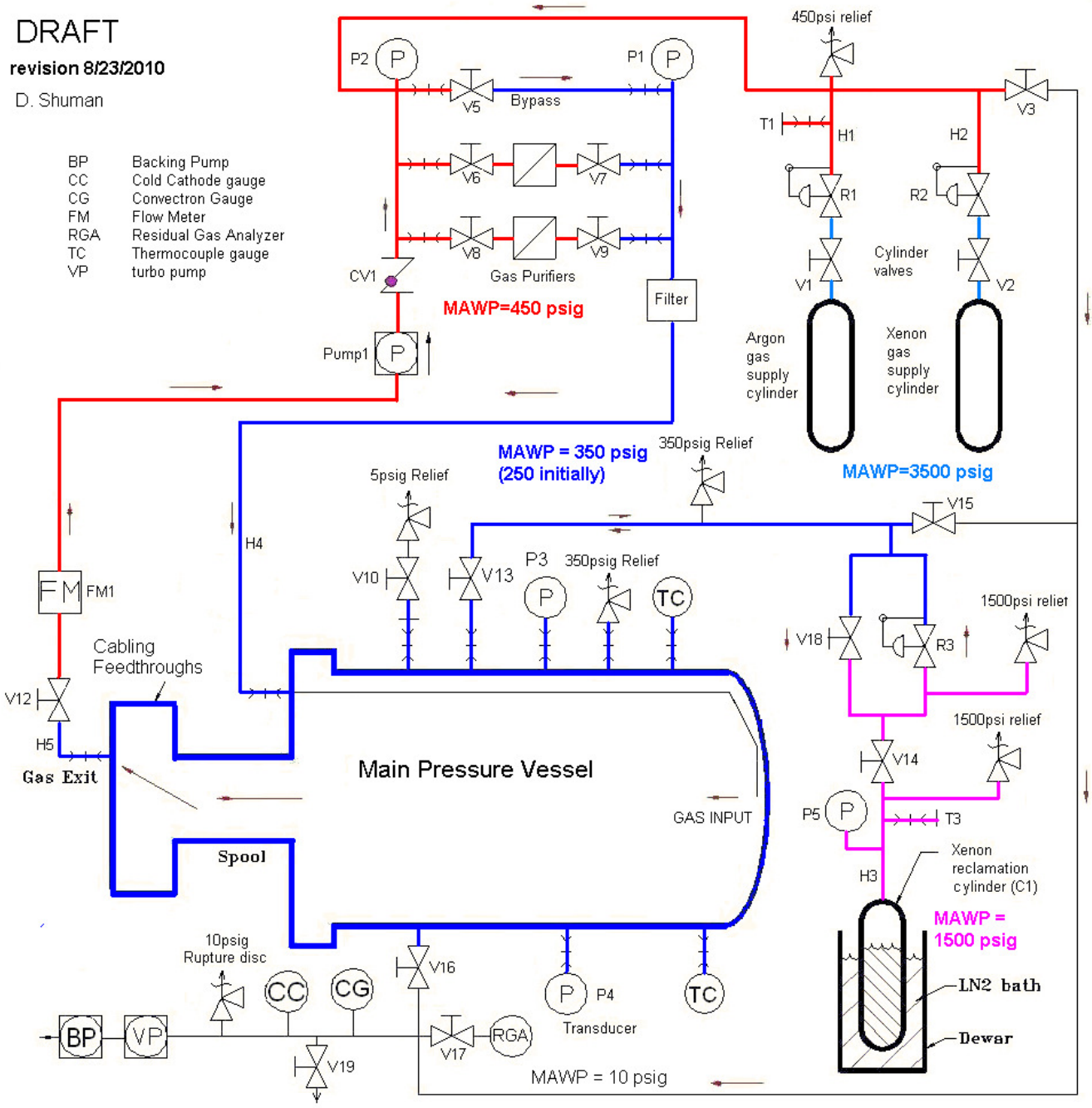
DRAFT
revision 8/23/2010
D. Shuman
BP Backing Pump
CC Cold Cathode gauge
CG Convectron Gauge
FM Flow Meter
RGA Residual Gas Analyzer
TC Thermocouple gauge
VP turbo pump
P2
P1
V5
Bypass
V6
V7
V8
V9
Gas Purifiers
CV1
Pump1
Filter
MAWP=450 psig
450psi relief
V3
T1
H1
H2
R1
R2
V1
V2
Cylinder valves
Argon gas supply cylinder
Xenon gas supply cylinder
MAWP=3500 psig
MAWP = 350 psig (250 initially)
350psig Relief
5psig Relief
V15
H4
V10
V13
P3
350psig Relief
TC
FM1
1500psi relief
V18
R3
Cabling Feedthroughs
V12
H5
Gas Exit
Main Pressure Vessel
GAS INPUT
1500psi relief
V14
P5
T3
Spool
H3
Xenon reclamation cylinder (C1)
MAWP = 1500 psig
10psig Rupture disc
CC
CG
V16
P4
Transducer
TC
LN2 bath
Dewar
BP
VP
V17
RGA
V19
MAWP = 10 psig