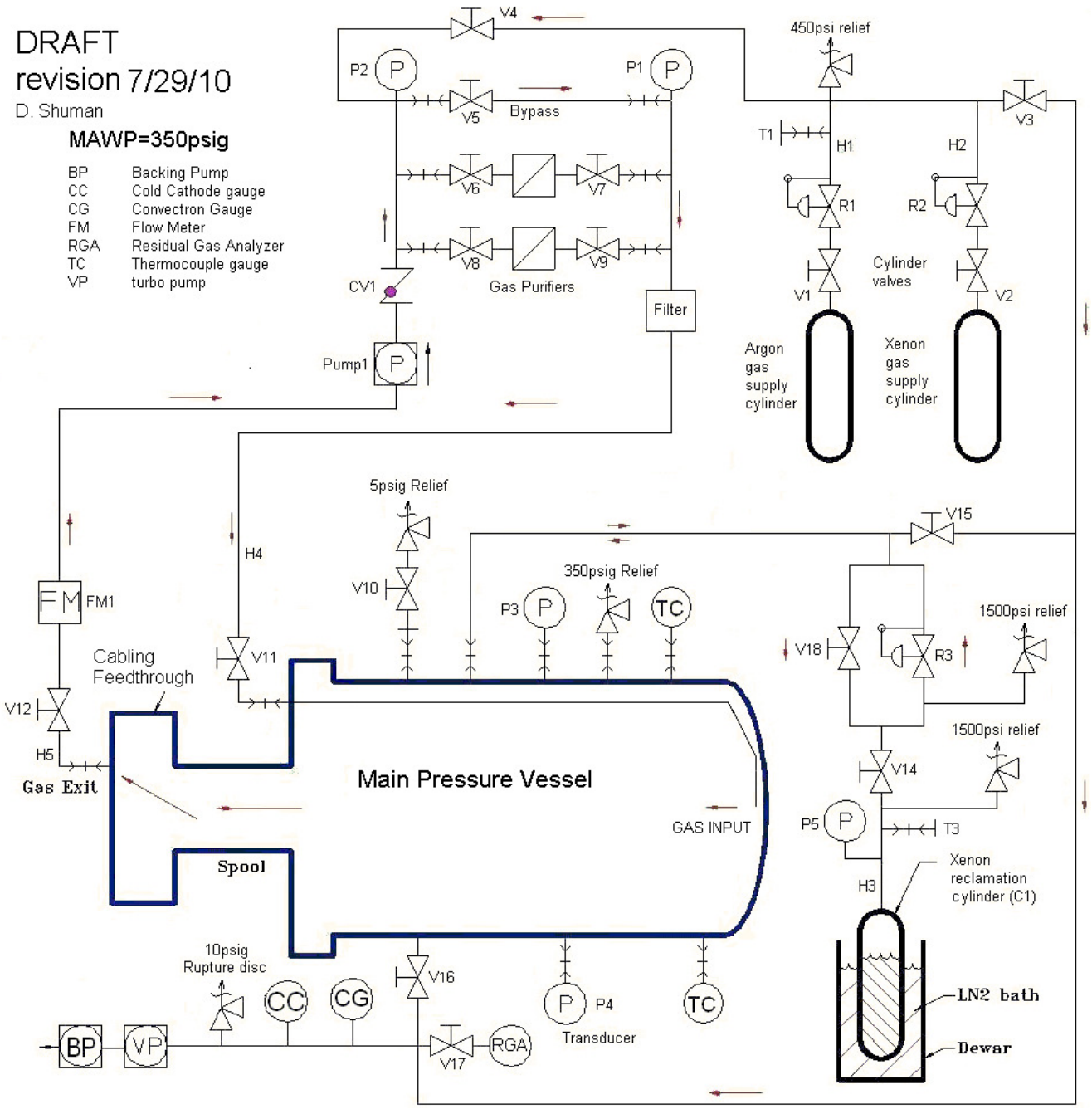
DRAFT
revision 7/29/10
D. Shuman
MAWP=350psig
BP Backing Pump
CC Cold Cathode gauge
CG Convectron Gauge
FM Flow Meter
RGA Residual Gas Analyzer
TC Thermocouple gauge
VP turbo pump
V4
P2
P1
V5
Bypass
450psi relief
V3
T1
H1
H2
V6
V7
R1
R2
V8
V9
Gas Purifiers
CV1
Filter
V1
Cylinder valves
V2
Pump1
Argon gas supply cylinder
Xenon gas supply cylinder
5psig Relief
V15
H4
V10
350psig Relief
P3
TC
FM1
1500psi relief
V18
R3
Cabling Feedthrough
V11
V12
H5
Gas Exit
Main Pressure Vessel
1500psi relief
V14
GAS INPUT
P5
T3
Spool
H3
Xenon reclamation cylinder (C1)
10psig Rupture disc
CC
CG
V16
P4
TC
LN2 bath
BP
VP
V17
RGA
Transducer
Dewar