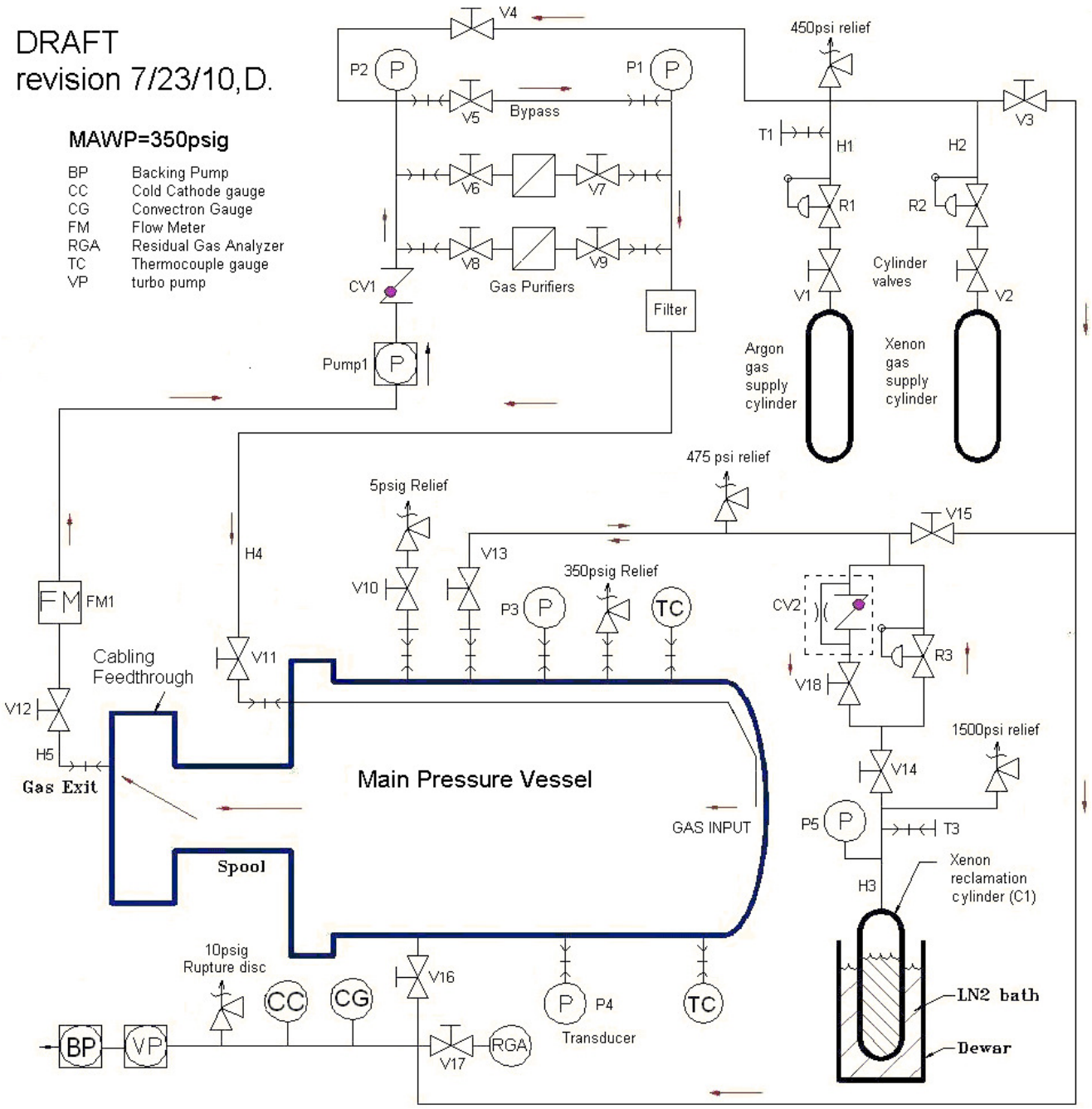
DRAFT
revision 7/23/10,D.
MAWP=350psig
BP Backing Pump
CC Cold Cathode gauge
CG Convectron Gauge
FM Flow Meter
RGA Residual Gas Analyzer
TC Thermocouple gauge
VP turbo pump
V4
P2
P1
V5
Bypass
V6
V7
V8
V9
Gas Purifiers
CV1
Filter
Pump1
450psi relief
V3
T1
H1
H2
R1
R2
V1
V2
Cylinder valves
Argon gas supply cylinder
Xenon gas supply cylinder
475 psi relief
5psig Relief
V15
V13
V10
350psig Relief
P3
TC
CV2
R3
V18
FM1
H4
V11
Cabling Feedthrough
V12
H5
Gas Exit
Main Pressure Vessel
Spool
GAS INPUT
1500psi relief
V14
P5
T3
H3
Xenon reclamation cylinder (C1)
LN2 bath
Dewar
10psig Rupture disc
CC
CG
V16
P4
Transducer
TC
BP
VP
V17
RGA