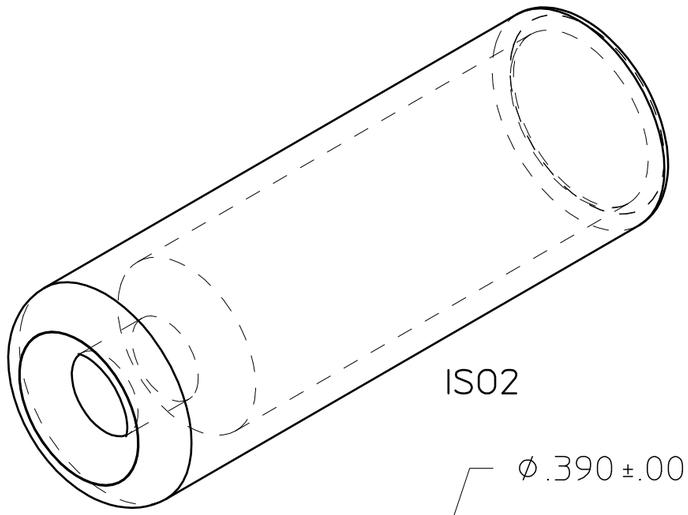

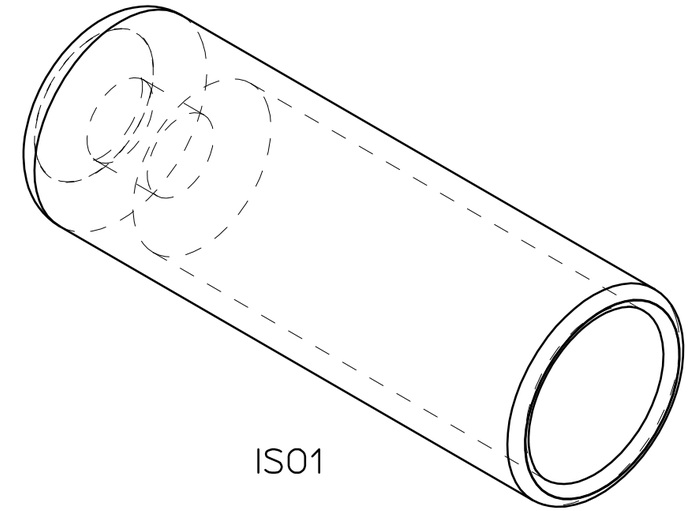

OVALISE END IN VISE
TO GIVE SNUG FIT ON
FEEDTHRU TERMINAL
FOR COVER RETENTION

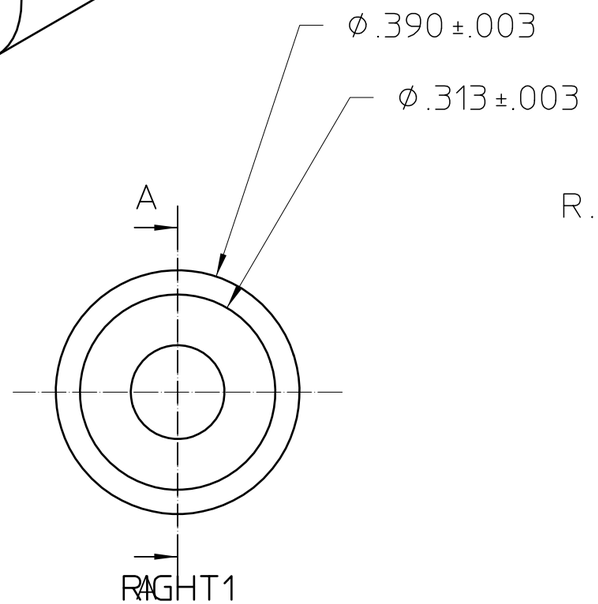

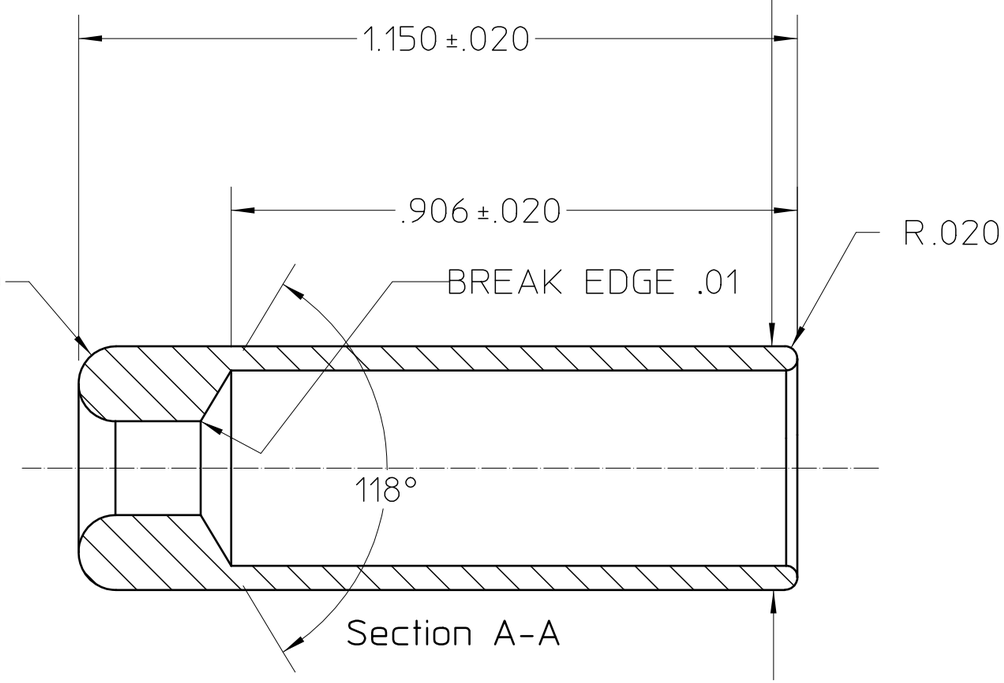

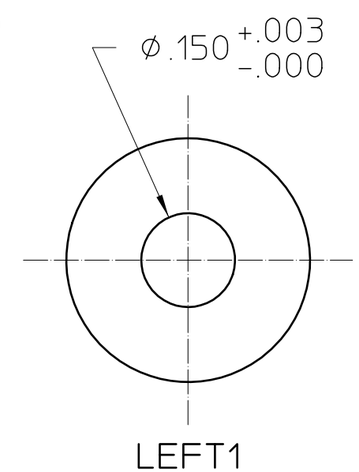

VER	AUTHOR	APPROVER	DATE	CHANGE DESCRIPTION
A	dbshuman			INITIAL VERSION (NO REVISION)

UNLESS OTHERWISE SPECIFIED
TOLERANCES: .X±.05 .XX±.01 .XXX±.005
FRACTIONS: ± 1/64
ANGLES: ± 0.2°
MACH. SURFS.: 125✓ OR BETTER
REF:ASME Y14.5M-1994, THREADS ARE CLASS 2
BREAK EDGES .016 MAX. ON MACHINED WORK
REMOVE BURRS, WELD SPLATTER & LOOSE SCALE

MAT 2: , NOTES:
MAT 1: , STAINLESS STEEL NOTES:

PROJECT NAME:
PROJECT NUMBER: SHOWN ON: 26K514
DO NOT SCALE PRINT
SCALE: 4 : 1
CATEGORY CODE. RP3040
THIRD ANGLE PROJECTION

ERNEST ORLANDO LAWRENCE
BERKELEY NATIONAL LABORATORY
UNIVERSITY OF CALIFORNIA

HIGH PRESSURE XENON TIME PROJECTION CHAMBER
TPC INTERNALS
HV CONNECTOR COVER

SHEET 1 OF 1 | SIZE: B | DWG NO: 26K305 | VER A