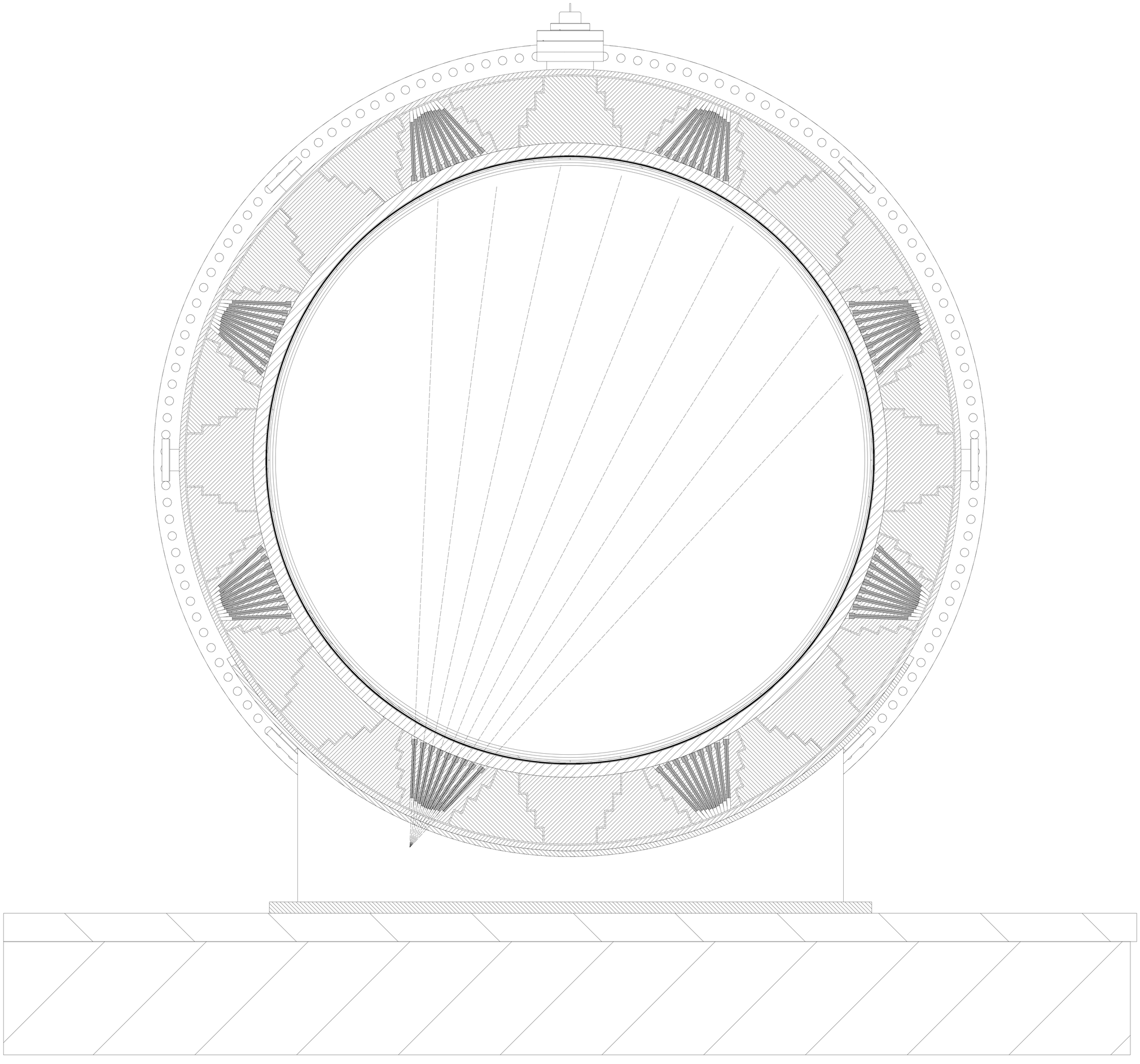

Section F-F