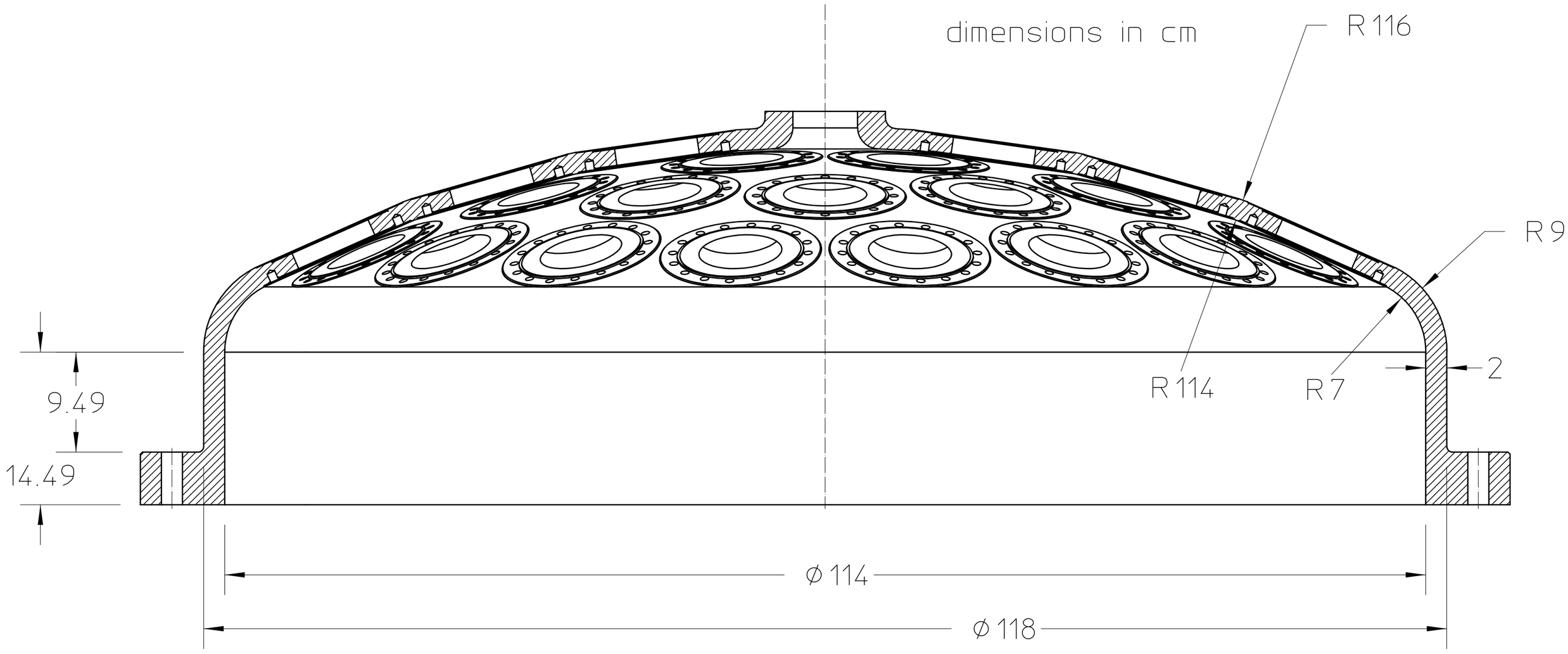Torispheric Head, 36 PMT CF Flange Design