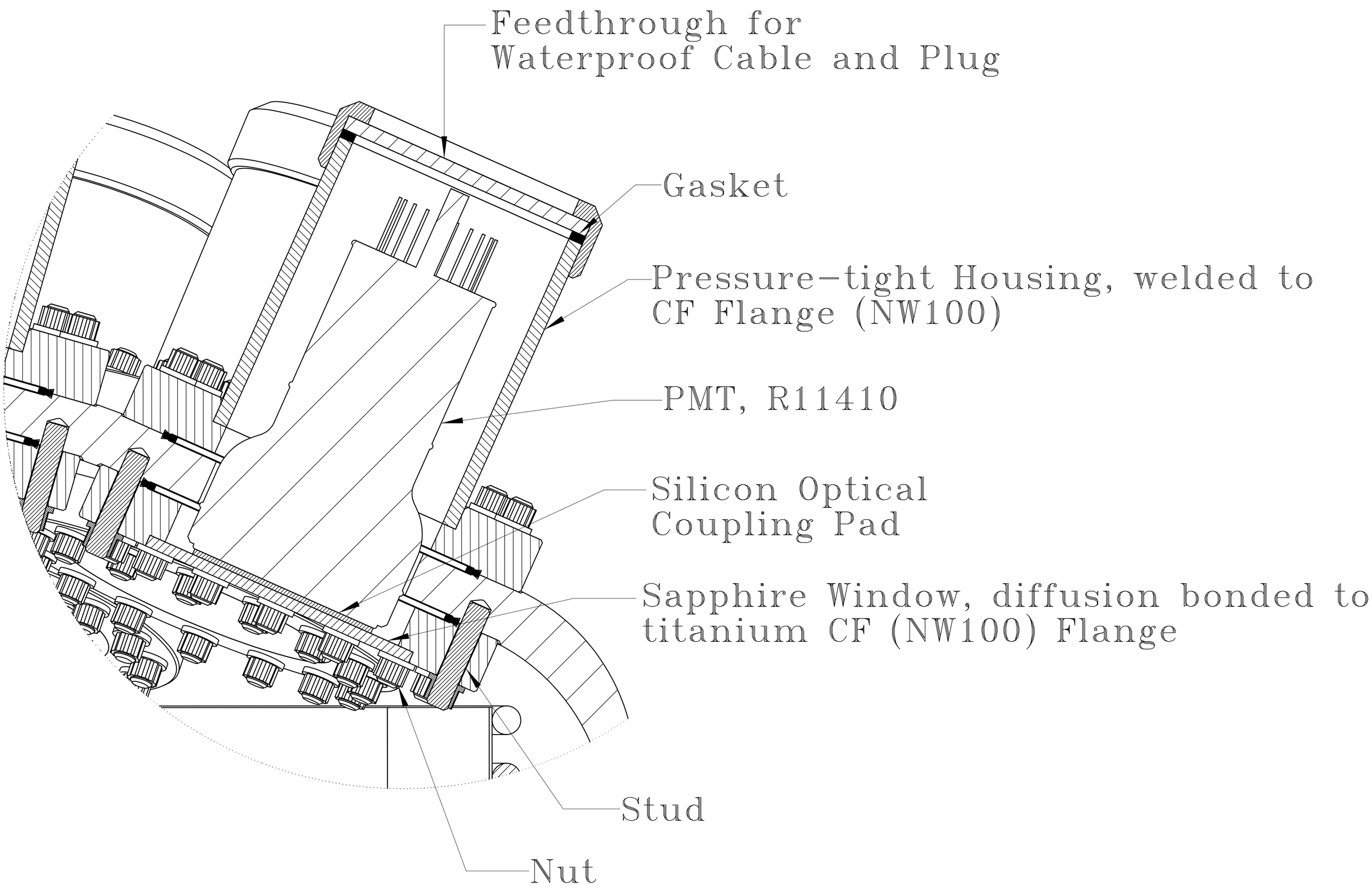
Feedthrough for
Waterproof Cable and Plug
Gasket
Pressure-tight Housing, welded to
CF Flange (NW100)
PMT, R11410
Silicon Optical
Coupling Pad
Sapphire Window, diffusion bonded to
titanium CF (NW100) Flange
Stud
Nut

Detail 1