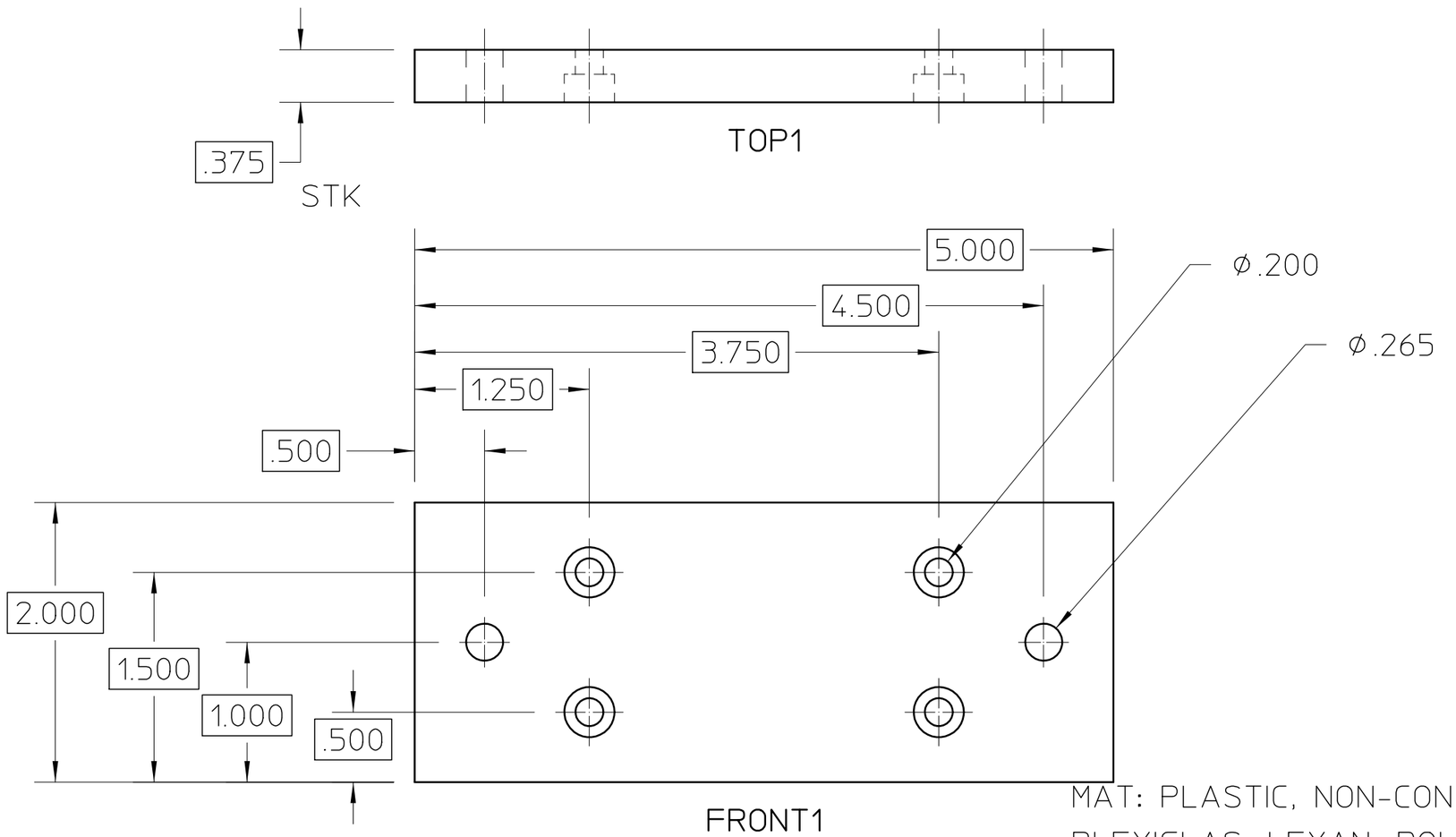

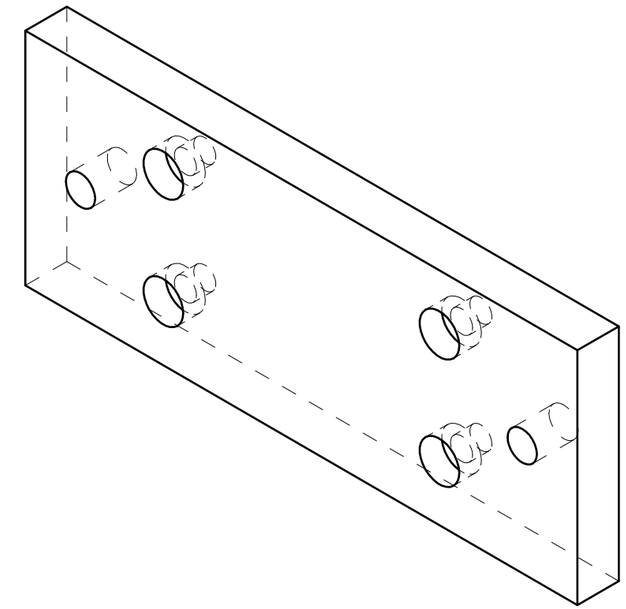

MAT: PLASTIC, NON-CONDUCTIVE, ACETAL, NYLON,
PLEXIGLAS, LEXAN, POLYETHYLENE, POLYPROPYLENE, ETC. OK

REQD	ITEM	PART NO.	DESCRIPTION

REV	AUTHOR	APPROVER	DATE	CHANGE DESCRIPTION
A	???	???	???	INITIAL REVISION

UNLESS OTHERWISE SPECIFIED
TOLERANCES: .X± .- .XX± .-- .XXX± .---
FRACTIONS: ± -/--
ANGLES: ± -.-°/INCH
MACH. SURFS.: 125✓ OR BETTER
REF: ASME Y14.5M-1994, THREADS ARE CLASS 2
BREAK EDGES .016 MAX. ON MACHINED WORK
REMOVE BURRS, WELD SPLATTER & LOOSE SCALE

PROJECT NAME: GENERAL
PROJECT NUMBER: NONE
DO NOT SCALE PRINT
SCALE: 1 : 1
CATEGORY CODE: XX0000
THIRD ANGLE PROJECTION

ERNEST ORLANDO LAWRENCE
BERKELEY NATIONAL LABORATORY
UNIVERSITY OF CALIFORNIA

TITLE1 STRING
TITLE2 STRING
TITLE3 STRING

SHEET 1 OF 1 | SIZE: B | DWG NO: base | REV A