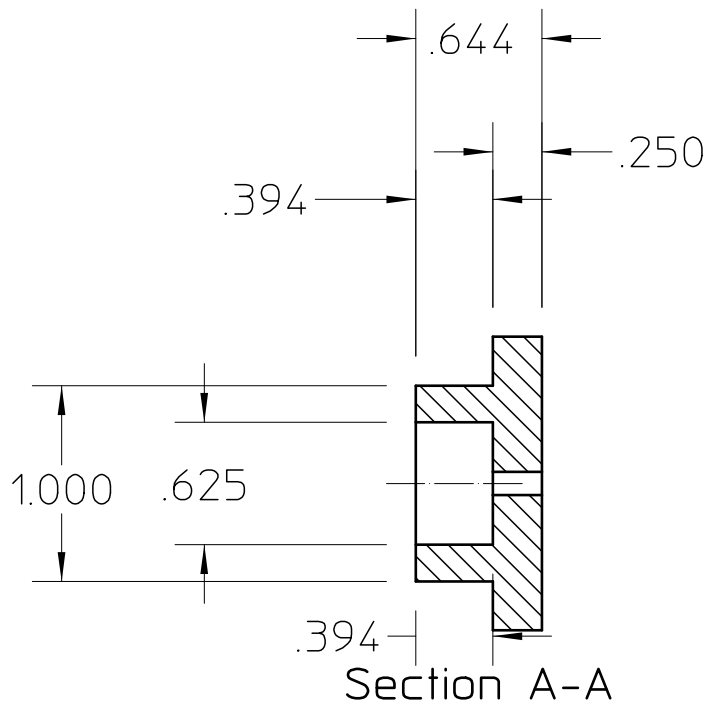

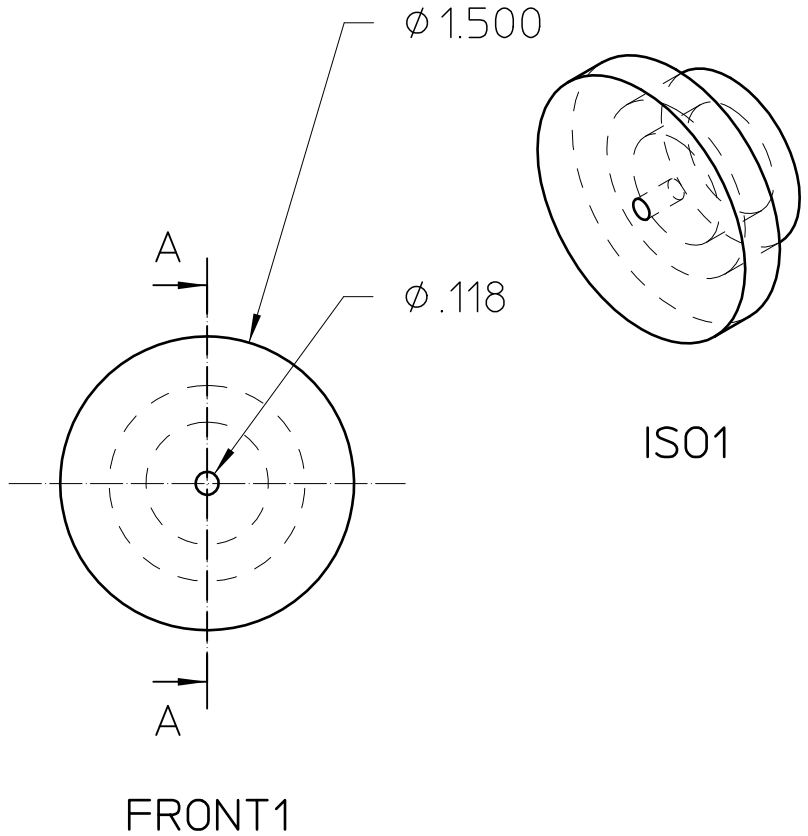

MAT: PLASTIC, NON-CONDUCTIVE, BLACK, ACETAL, NYLON, PLEXIGLAS, LEXAN, POLYETHYLENE, POLYPROPYLENE, ETC. OK

REQD	ITEM	PART NO.	DESCRIPTION

REV	AUTHOR	APPROVER	DATE	CHANGES
A	???	???	??-??-??	INITIAL

UNLESS OTHERWISE SPECIFIED
REF: ASME Y14.5M-1994, THREADS ARE CLASS 2
BREAK EDGES .016 MAX. ON MACHINED WORK
REMOVE BURRS, WELD SPLATTER & LOOSE SCALE

TOLERANCES: .X±.- .XX±.-- .XXX±.---
FRACTIONS: ± -/--
ANGLES: ± -.-°/INCH
MACH. SURFS.: 125✓ OR BETTER

PROJECT NAME: GENERAL
PROJECT NUMBER: NONE
DO NOT SCALE PRINT
SCALE: 1 : 1
CATEGORY CODE: XX0000
THIRD ANGLE PROJECTION

ERNEST ORLANDO LAWRENCE
BERKELEY NATIONAL LABORATORY
UNIVERSITY OF CALIFORNIA

TITLE1 STRING
TITLE2 STRING
TITLE3 STRING

SHEET 1 OF 1
SIZE: A
DWG NO: Ashroud-end
REV A