OPERATING VOLTAGE- 120KVDC
DESIGNED FOR USE IN OIL OR INSULATING GREASE
UL LABELED, CATEGORY ZQQF2, FILE # E204948

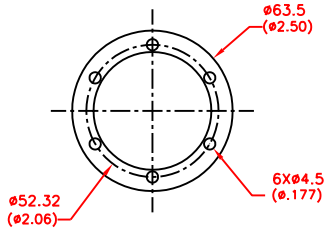

STYLE A

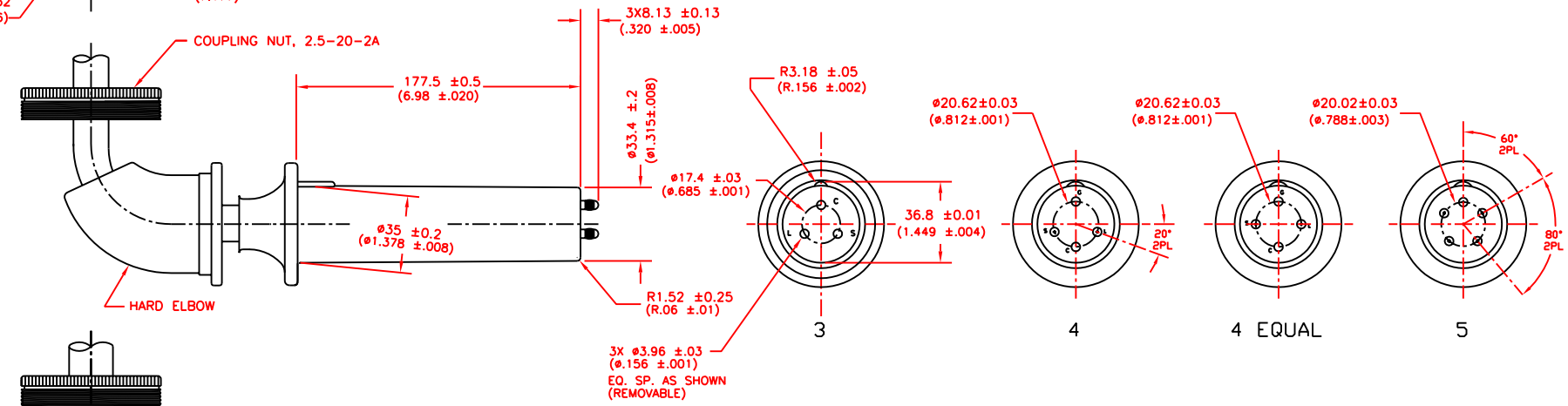

STYLE B

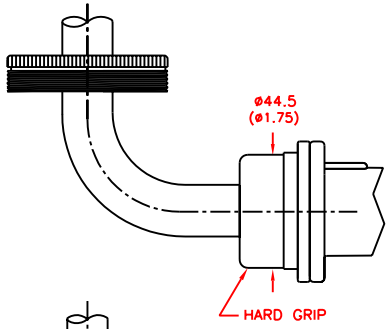

STYLE C

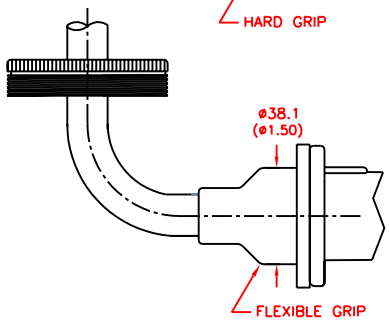

STYLE D

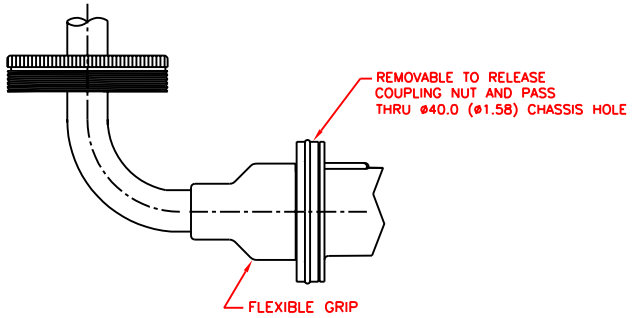

VOLTAGE	CONDUCTORS	CABLE P/N
120 KVDC	3	2212
120 KVDC	4	2213
120 KVDC	4 EQUAL	2171
120 KVDC	5	2171
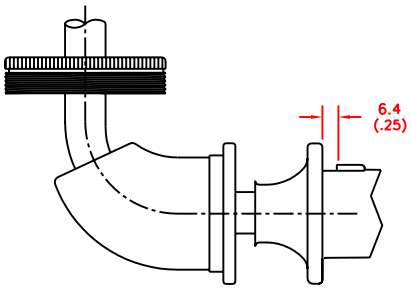
1. END STYLES MAY BE MIXED AND MATCHED WITHIN CABLE CONSTRAINTS AS SHOWN.
2. ALL ASSEMBLIES INCLUDE GASKETS FOR FULL KEY (STANDARD) CUT KEY WITH SQUARE GASKET OPTIONAL (SEE BELOW)