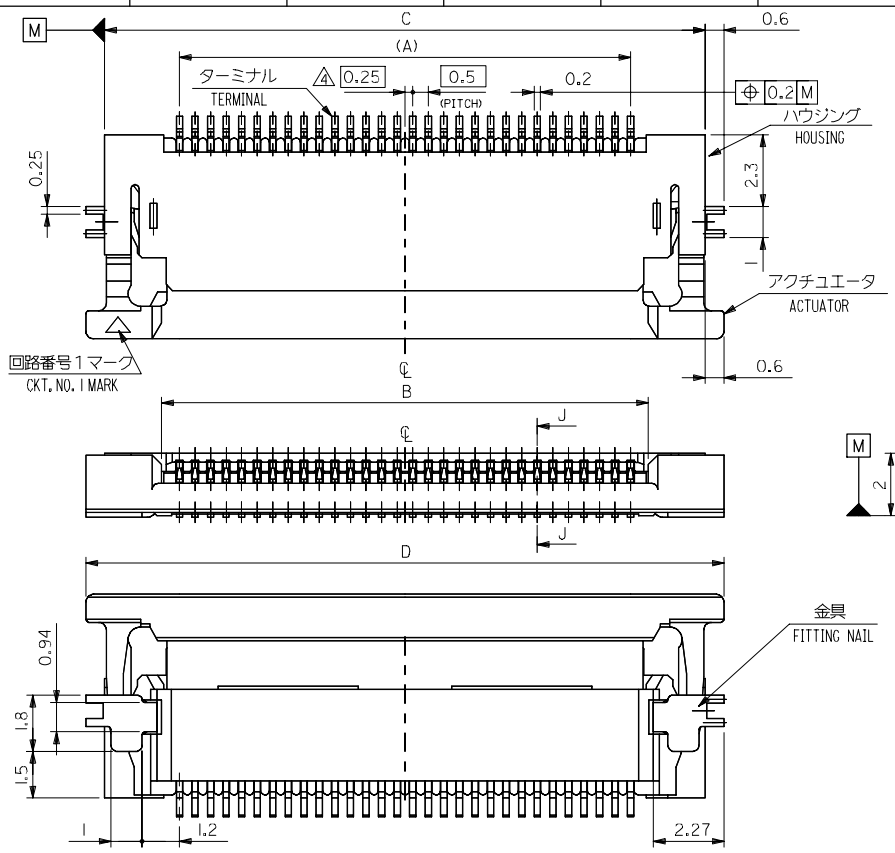

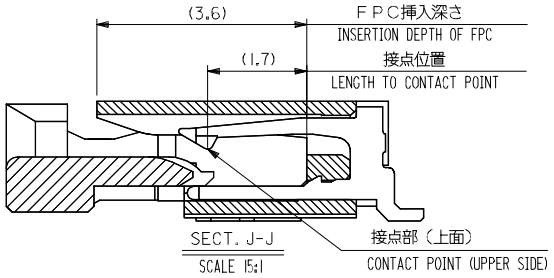

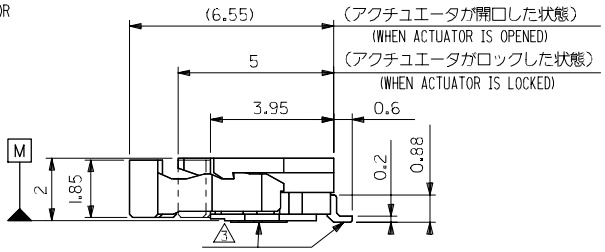

D	C	B	A	EMBOSSED TAPE ORDER No. オーダー番号	MATERIAL NO.	CIRCUIT
30.5	29.3	25.65	24.5	54104-5096	54104-5039	50
28.5	27.3	23.65	22.5	54104-4696	54104-4639	46
28.0	26.8	23.15	22.0	54104-4596	54104-4539	45
27.0	25.8	22.15	21.0	54104-4396	54104-4339	43
25.5	24.3	20.65	19.5	54104-4096	54104-4039	40
24.5	23.3	19.65	18.5	54104-3896	54104-3839	38
23.5	22.3	18.65	17.5	54104-3696	54104-3639	36
23.0	21.8	18.15	17.0	54104-3596	54104-3539	35
22.5	21.3	17.65	16.5	54104-3496	54104-3439	34
22.0	20.8	17.15	16.0	54104-3396	54104-3339	33
21.5	20.3	16.65	15.5	54104-3296	54104-3239	32
20.5	19.3	15.65	14.5	54104-3096	54104-3039	30

REVISED
EC NO: J2008-4308 2008/06/27
DRWN:MNABE1 2008/06/30
CHKD:THARUYAMA 2008/06/30
APPR:NUKITA 2008/06/30
DESCRIPTION
REV A

GENERAL TOLERANCES (UNLESS SPECIFIED)

10 UNDER	±0.2
10 OVER 30 UNDER	±0.25
30 OVER	±0.3
ANGULAR	±3 °

DRAFT WHERE APPLICABLE MUST REMAIN WITHIN DIMENSIONS

DIMENSION STYLE: MM ONLY
SCALE: ---
DESIGN UNITS: METRIC
THIRD ANGLE PROJECTION

DRAWN BY: Y.SAKIYAMA DATE: '04/01/22
CHECKED BY: M.SASAO DATE: '04/01/22
APPROVED BY: M.SASAO DATE: '04/01/22

TITLE: 0.5 FPC CONN ZIF HSG ASSY FOR SMT RA UPR CONT -LEAD FREE-

molex MOLEX INCORPORATED

MATERIAL NO.: SEE TABLE
DOCUMENT NO.: SD-54104-071
SHEET NO.: 1 OF 2
SIZE: A3

THIS DRAWING CONTAINS INFORMATION THAT IS PROPRIETARY TO MOLEX INCORPORATED AND SHOULD NOT BE USED WITHOUT WRITTEN PERMISSION

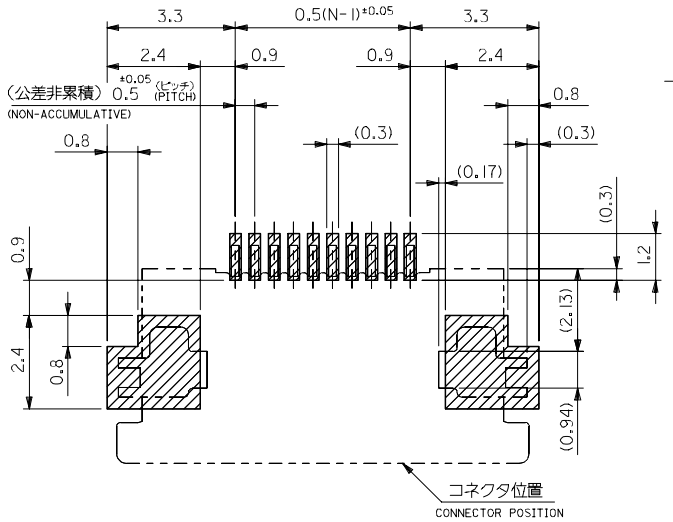

参考基板レイアウト
RECOMMENDED P.C.BOARD PATTERN DIMENSION (REF.)
(マウント面)
(MOUNTING SIDE)

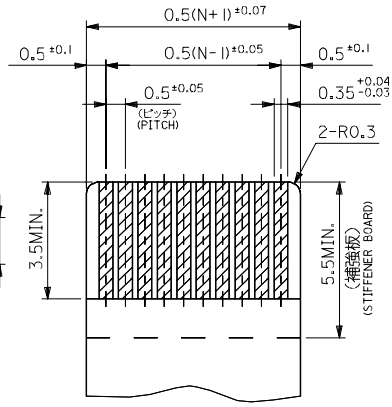

適合ＦＰＣ推奨寸法
APPLICABLE FPC RECOMMENDED DIMENSION
(仕上がり厚さ：0.3±0.03)
(THICKNESS:0.3±0.03)

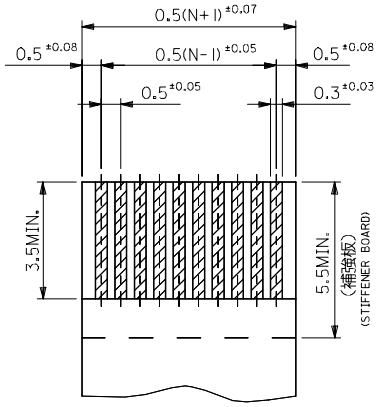

適合ＦＦＣ推奨寸法
APPLICABLE FFC RECOMMENDED DIMENSION
(仕上がり厚さ：0.3±0.03)
(THICKNESS:0.3±0.03)

注記 NOTES

1. 使用材料 MATERIAL

ハウジング HOUSING ：46ナイロン、UL94V-0 46NYLON

アクチュエータ ACTUATOR ：PPS、UL94V-0

ターミナル TERMINAL ：リン青銅、ニッケル下地 錫ビスマスメッキ（t=0.2） PHOS-BRONZE,TIN-BISMUSTH OVER NICKEL PLATING.(t=0.2)

金具 FITTING NAIL ：リン青銅、ニッケル下地 錫メッキ（t=0.2） PHOS-BRONZE,TIN OVER NICKEL PLATING.(t=0.2)

2. エンボステープ梱包時は、アクチュエータがロックした状態とする。
IN THE PACKAGE,ACTUATOR OF PART NO.54104-**39 SHOULD BE LOCKED.

3. ソルダーテール半田付け面のズレ量、及び金具半田付け面のズレ量は、基準面 H に対し上方向 0.1 MAX.下方向 0.15MAX.とし、相互のバランス量は、0.1MAX.とする。
MISALIGNMENT OF SOLDER TAILS AND FITTING NAILS FROM H
UPPER DIRECTION: 0.1 MAX. , LOWER DIRECTION: 0.15MAX.
OFFSET BETWEEN UPPER AND LOWER 0.1 MAX.

4. 偶数極に適用。
APPLY FOR EVEN CIRCUIT.

5. パターンはくり止め用金具
FITTING NAIL FOR PREVENTION OF PEELING OF P.C.B. PATTERN.

6. 本製品は 54104-**37 の鉛フリー品である。
THIS PRODUCT IS LEAD FREE OF 54104-**37.

FPC/FFCについて

打抜き方向は導体側から補強板側を推奨いたします。
導体部については軟銅箔35マイクロメーターまたは50マイクロメーター
メッキ厚 3～9マイクロメーター錫または半田メッキ（電気メッキ）

RECOMMENDED PUNCHER DIRECTION:
FROM CONDUCTOR SIDE TO STIFFENER BOARD SIDE.
RECOMMENDED CONDUCTOR SPEC.:
THICKNESS OF SOFT COPPER FOIL:
35 micrometer or 50 micrometer
TIN OR SOLDER PLATING:
3～9 micrometer(ELECTRICAL PLATING)

FPCについて

補強フィルム材質はポリイミドを推奨致します。
接着剤は熱硬化接着剤を推奨致します。

RECOMMENDED MATERIAL:
STIFFENER FILM : POLYIMIDE
BONDING AGENT : THERMOSETTING BONDING AGENT

REV	DESCRIPTION		
A	REVISED EC NO: J2008-4308 DRWN:MNABE I CHKD:T HARUYAMA APPR:NUKITA	2008/06/27 2008/06/30 2008/06/30	

GENERAL TOLERANCES (UNLESS SPECIFIED)

10 UNDER	±0.2
10 OVER 30 UNDER	±0.25
30 OVER	±0.3
ANGULAR	±3 °

DRAFT WHERE APPLICABLE MUST REMAIN WITHIN DIMENSIONS

DIMENSION STYLE: MM ONLY	SCALE: ---	DESIGN UNITS: METRIC	THIRD ANGLE PROJECTION
DRAWN BY: Y.SAKIYAMA	DATE: '04/01/22		
CHECKED BY: M.SASAO	DATE: '04/01/22		
APPROVED BY: M.SASAO	DATE: '04/01/22		
MATERIAL NO.: SEE SHEET 1	DOCUMENT NO.: SD-54104-071	SHEET NO.: 2 OF 2	

MODEL NO.: 54104-**39

TITLE: 0.5 FPC CONN ZIF HSG ASSY FOR SMT RA UPR CONT -LEAD FREE-

molex MOLEX INCORPORATED

SIZE: A3

THIS DRAWING CONTAINS INFORMATION THAT IS PROPRIETARY TO MOLEX INCORPORATED AND SHOULD NOT BE USED WITHOUT WRITTEN PERMISSION

DWG. NO. SD-54104-072

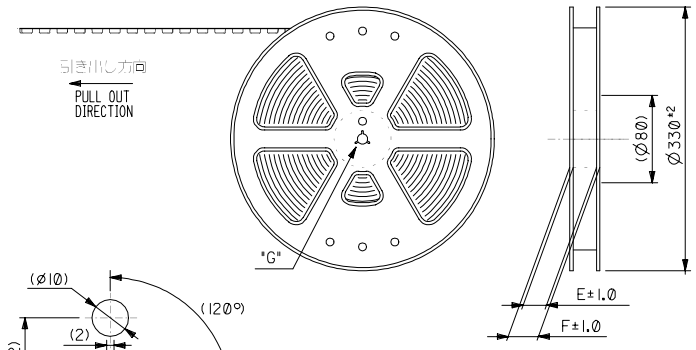

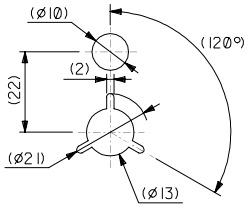

DETAIL "G"

NOTES

1. 梱包数量：1500個/リール
NUMBER OF CONNECTORS : 1500PCS/REEL

2. リードテープ長さ LEAD TAPE LENGTH

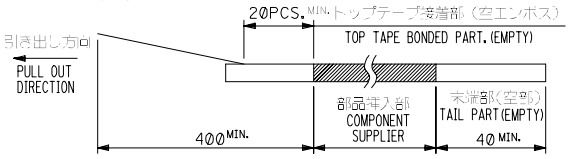

3. トップテープの剥離強度：0.1～1.3N (10 ～ 130gf)
（剥離方向は下図参照）
尚、本規格値は出荷時に適用。（但し、輸送時に剥離が発生しないこと。）
PEELING OFF FORCE OF TOP TAPE : 0.1～1.3N (10 ～ 130gf)
(PEELING DIRECTION AS SHOWN IN FOLLOWING FIG.)
THIS REQUIREMENT SHOULD BE APPLIED AT SHIPMENT.
PEEL OFF SHOULD NOT BE ALLOWED , DURING TRANSPORTATION.

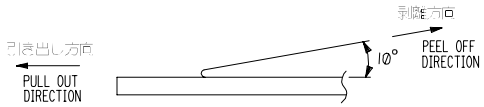

4. 材料(MATERIAL)
キャリアテープ(CARRIER TAPE)：ポリプロピレン(POLYPROPYLENE)
トップテープ(TOPTAPE)：PET , PE , PEF
リール(REEL)：ポリスチレン(PS)<リサイクル材を含む>
POLYSTYRENE (PS) <RECYCLE MATERIAL CONTAINED>

5. 本製品は 54104-**92 の鉛フリー品である。
THIS PRODUCT IS LEAD FREE OF 54104-**92.

キャリアテープ幅 CARRIER TAPE WIDTH	F	E	D	C	B	A	MATERIAL NO.	CIRCUIT
44	49.4	45.4	30.8	31.9	26.1	29.6	54104-5096	50
			28.8	29.9	24.1	27.6	-4696	46
			28.3	29.4	23.6	27.1	-4596	45
			27.3	28.4	22.6	26.1	-4396	43
			25.8	26.9	21.1	24.6	-4096	40
			24.8	25.9	20.1	23.6	-3896	38
			23.8	24.9	19.1	22.6	-3696	36
			23.3	24.4	18.6	22.1	-3596	35
			22.8	23.9	18.1	21.6	-3496	34
			22.3	23.4	17.6	21.1	-3396	33
			21.8	22.9	17.1	20.6	-3296	32
			20.8	21.9	16.1	19.6	54104-3096	30

DO NOT SCALE DRAWING

EC NO.			
DRWN:			
CH'K:			
APPR:			
EC NO.			
DRWN:			
CH'K:			
APPR:			
EC NO.			
DRWN:			
CH'K:			
APPR:			
EC NO.	REVISED	'04/04/21	
DRWN:	J2004-3918	Y.WADA	
CH'K:		M.SASAO	
APPR:		M.SASAO	
EC NO.	RELEASED	'04/01/22	
DRWN:	J2004-2032	Y.SAKIYAMA	
CH'K:		M.SASAO	
APPR:		M.SASAO	
REV	A	0	DESCRIPTION

MATERIAL 材料: 注記参照 SEE NOTES
FINISH 仕上げ: —/—
WIRE RANGE 適用電線範囲: —/—
INS. RANGE 被覆外径: —/—

GENERAL TOLERANCES: (UNLESS SPECIFIED) 一般公差
10 UNDER 未満 ±0.2
10 OVER 以上 30 UNDER 未満 ±0.25
30 OVER 以上 ±0.3
ANGLE 角度 ±3°

SCALE —/—
DESIGN UNITS ☒mm ☐INCH
MODEL NO. 54104-**96
THIRD ANGLE PROJECTION
DIMENSIONS: ☐mm/INCH ☐INCH/mm ☒mm ONLY
SHT
REV
REVISE ON CAD ONLY

DRAWN BY & DATE Y.SAKIYAMA '04/01/22
CHECKED BY & DATE M.SASAO '04/01/22
APPROVED BY & DATE M.SASAO '04/01/22
CAD FILENAME SD-54104-072.S01

TITLE: Embstp Pkg for 0.5 FFC Conn ZIF Hsg Assy -LEAD FREE-

molex MOLEX INCORPORATED

MATERIAL NO. SEE CHART
DRAWING NO. SD-54104-072
SHEET NO. 1 OF 2

THIS DRAWING CONTAINS INFORMATION THAT IS PROPRIETARY TO MOLEX INCORPORATED AND SHOULD NOT BE USED WITHOUT WRITTEN PERMISSION.

SIZE B

EN-02J(097) MXJ-54

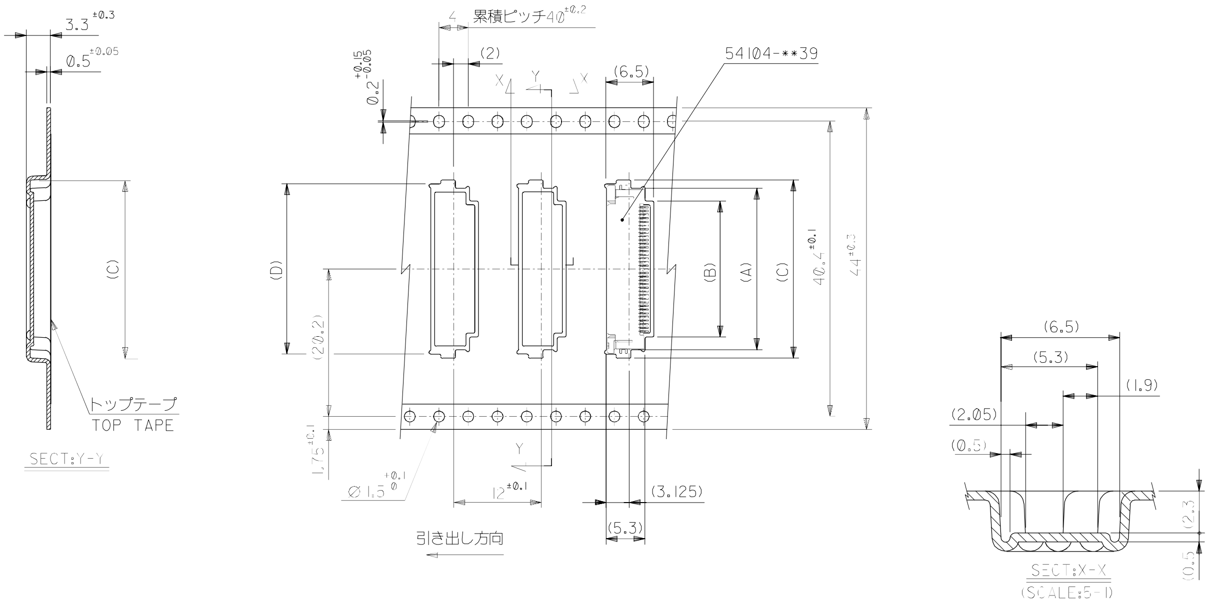

MODEL NO.	54104-**96
DIMENSIONS:	☐ mm/INCH ☐ INCH/mm ☒ mm ONLY
SHT REV	REVISE ON CAD ONLY
MATERIAL 材料	SHEET 1 OF 2 参照 REFER TO SHEET 1 OF 2
FINISH 仕上げ	-//-
WIRE RANGE 適用電線範囲	-//-
INS. RANGE 被覆外径	-//-

GENERAL TOLERANCES: (UNLESS SPECIFIED) 一般公差

10 UNDER 未満	±0.2
10 OVER 以上 30 UNDER 未満	±0.25
30 OVER 以上	±0.3
ANGLE 角度	±3°

SCALE -//-

DESIGN UNITS ☒mm ☐INCH

THIRD ANGLE PROJECTION

DRAWN BY & DATE Y.SAKIYAMA '04/01/22

CHECKED BY & DATE M.SASAO '04/01/22

APPROVED BY & DATE M.SASAO '04/01/22

TITLE: Embstp Pkg for Ø.5 FPC Conn Zif Hsg Assy -LEAD FREE-

molex MOLEX INCORPORATED

CAD FILENAME	MATERIAL NO.	DRAWING NO.	SHEET NO.
SD-54104-072.S02	SEE CHART	SD-54104-072	2 OF 2

SIZE B

THIS DRAWING CONTAINS INFORMATION THAT IS PROPRIETARY TO MOLEX INCORPORATED AND SHOULD NOT BE USED WITHOUT WRITTEN PERMISSION.

REV	DESCRIPTION
∅	RELEASED '04/01/22 EC NO. J2004-2032 DRWN: Y.SAKIYAMA CH'K: M.SASAO APPR: M.SASAO
A	REVISED '04/04/21 EC NO. J2004-3918 DRWN: Y.WADA CH'K: M.SASAO APPR: M.SASAO
	EC NO: DRWN: CH'K: APPR:
	EC NO: DRWN: CH'K: APPR:
	EC NO: DRWN: CH'K: APPR:

DO NOT SCALE DRAWING

DWG. NO. SD-54104-072