DIMS IN MM/IN

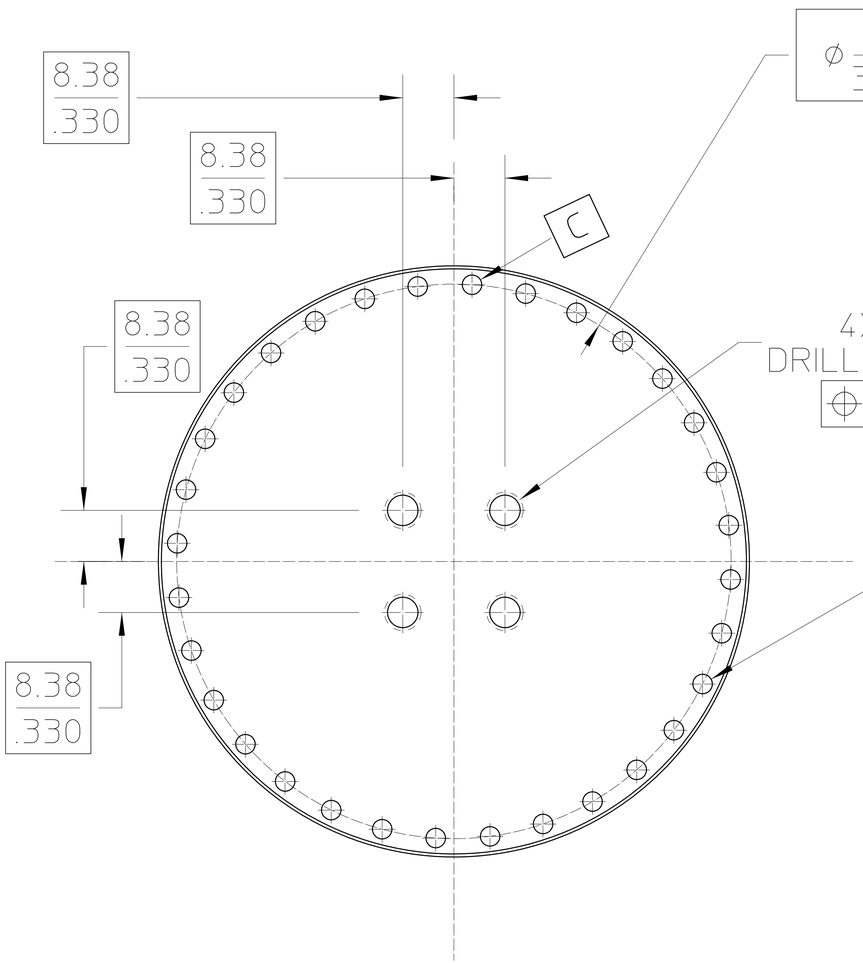

FRONT1

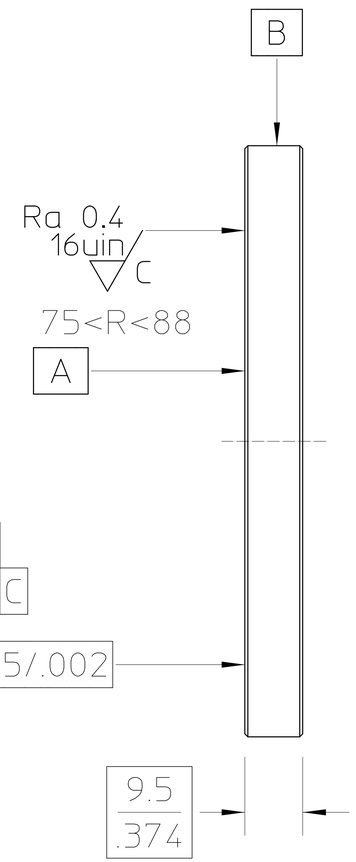

RIGHT1

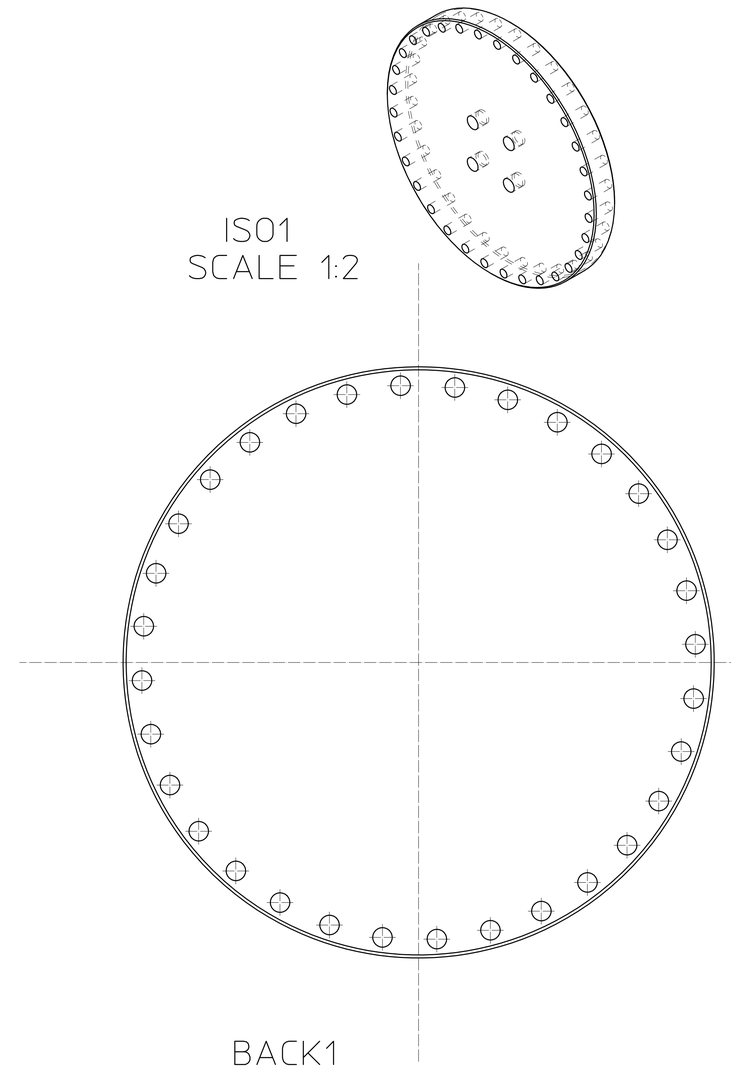

BACK1

–	dbshuman			INITIAL VERSION (no revision)
REV	AUTHOR	APPROVER	DATE	CHANGE DESCRIPTION

UNLESS OTHERWISE SPECIFIED

TOLERANCES: .X ± .- .XX ± .-- .XXX ± .---
FRACTIONS: ± -/--
ANGLES: ± -.-°/INCH
MACH. SURFS.: 125 ✓ OR BETTER

REF: ASME Y14.5M-1994, THREADS ARE CLASS 2
BREAK EDGES .016 MAX. ON MACHINED WORK
REMOVE BURRS, WELD SPLATTER & LOOSE SCALE

MAT 2: , — NOTES:
MAT 1: , COPPER, OFE — NOTES:

PROJECT NAME: PHYSICS RESEARCH
UNIQUE NUMBER: RP-0000-0465

DO NOT SCALE PRINT — SCALE: 1 : 1
CATEGORY CODE: RP3111
THIRD ANGLE PROJECTION

ERNEST ORLANDO LAWRENCE
BERKELEY NATIONAL LABORATORY
UNIVERSITY OF CALIFORNIA

NEXT-100 XENON TIME PROJECTION CHAMBER
ENERGY PLANE - PMT ENCLOSURES
BACKPLATE

SHEET 1 OF 1 | SIZE: B | DWG NO: 26K608 | VER A