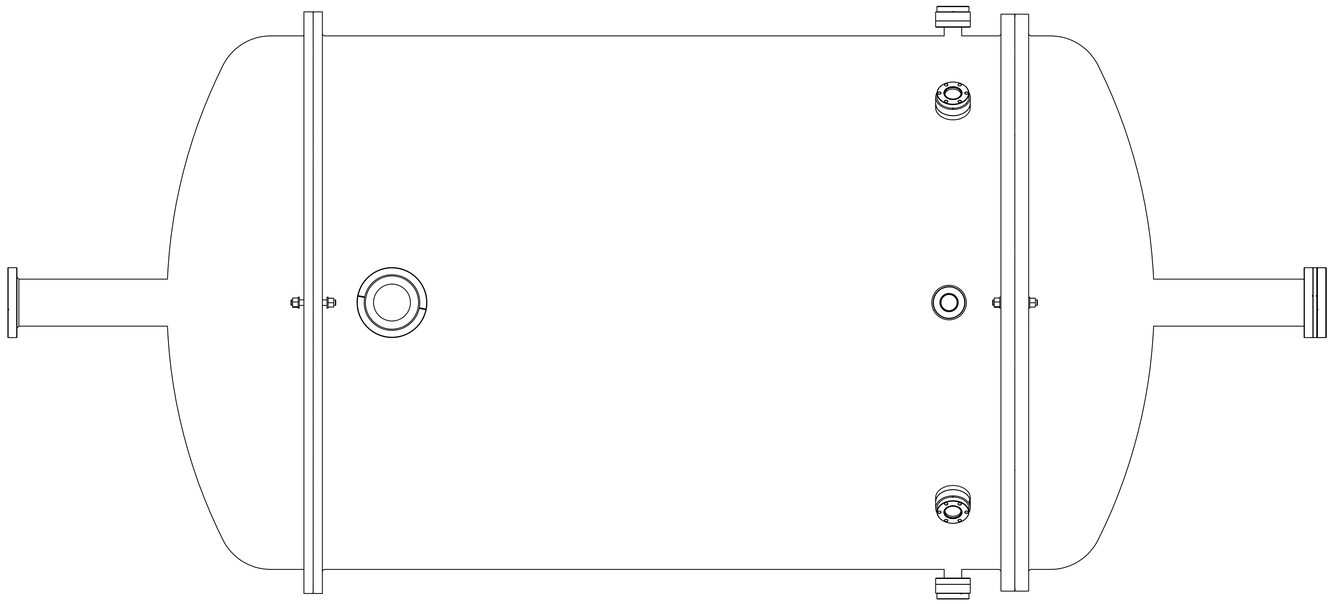

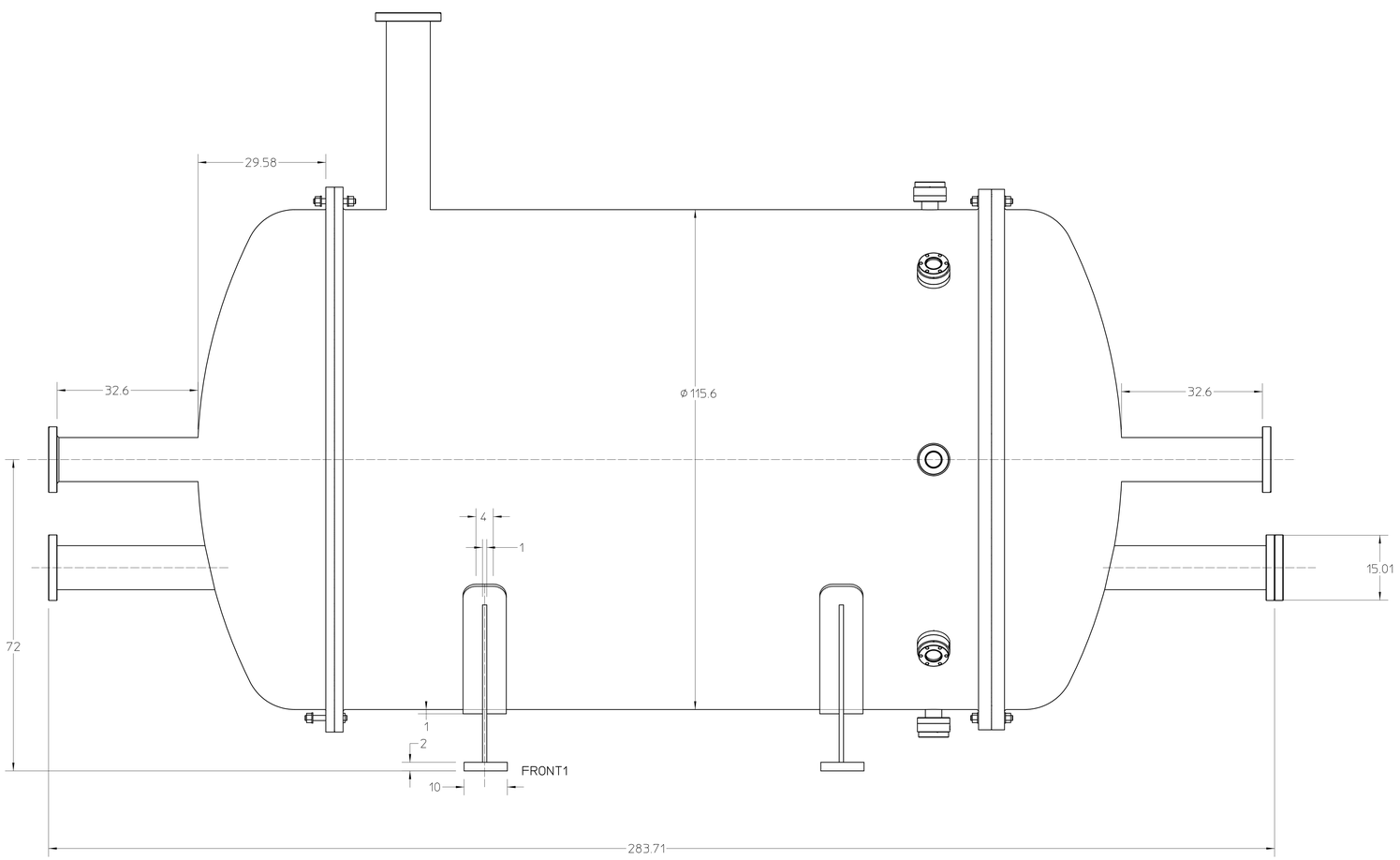

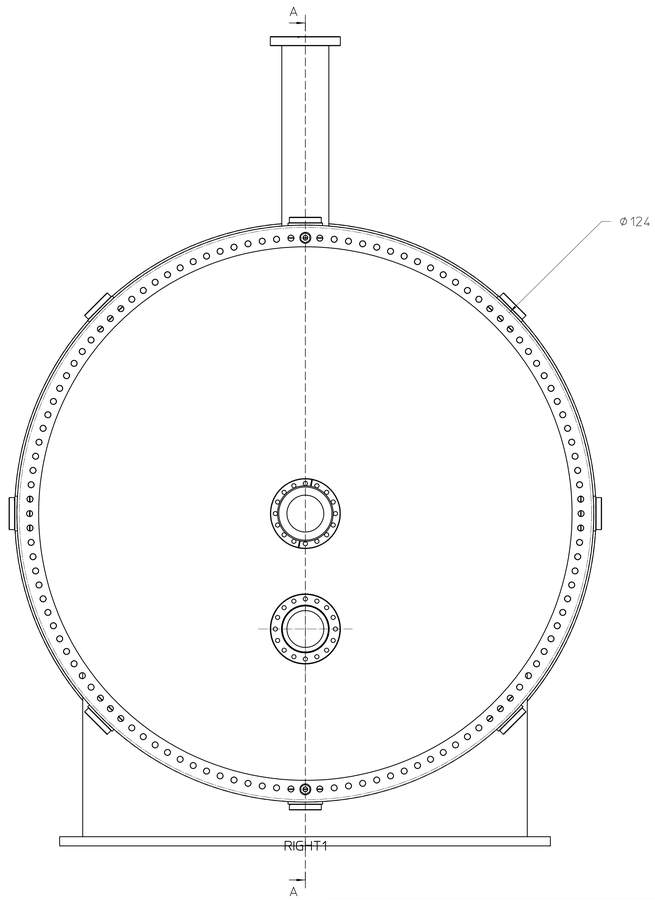

REQD	ITEM	PART NO.	DESCRIPTION

VER	AUTHOR	APPROVER	DATE	CHANGE DESCRIPTION
A	DS	JJGC	SEPT 19,2011	INITIAL VERSION

UNLESS OTHERWISE SPECIFIED
TOLERANCES: .X± .- .XX± .-- .XXX± .---
FRACTIONS: ± -/--
ANGLES: ± -.-°/INCH
MACH. SURFS.: 125√ OR BETTER
REF-ASME Y14.5M-1994, THREADS ARE CLASS 2
BREAK EDGES .016 MAX. ON MACHINED WORK
REMOVE BURRS, WELD SPLATTER & LOOSE SCALE

PROJECT NAME: GENERAL
PROJECT NUMBER: NONE
DO NOT SCALE PRINT
SCALE: 1:5
CATEGORY CODE XX0000
THIRD ANGLE PROJECTION

ERNEST ORLANDO LAWRENCE
BERKELEY NATIONAL LABORATORY
UNIVERSITY OF CALIFORNIA
NEXT COLLABORATION/IFIC
NEXT 100 EXPERIMENT
PRESSURE VESSEL

SHEET 1 OF 2 | SIZE: E | DWG NO: NEXT-1001 | VER A