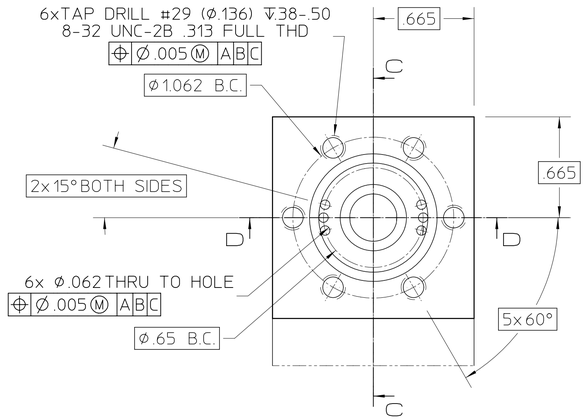

DETAIL 1
SCALE 2/1
STANDARD 1-1/3 MINI-CFF KNIFE EDGE

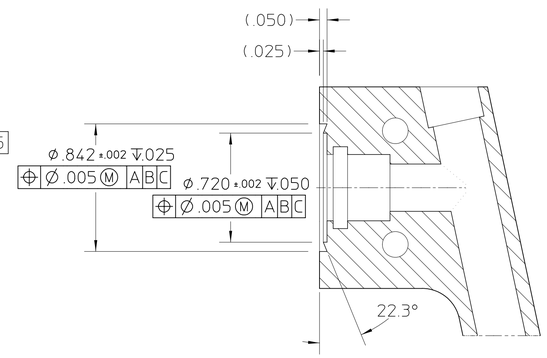

SECTION C-C
TYP 3 PLACES
SCALE 2/1
STANDARD 1-1/3 MINI-CFF KNIFE EDGE

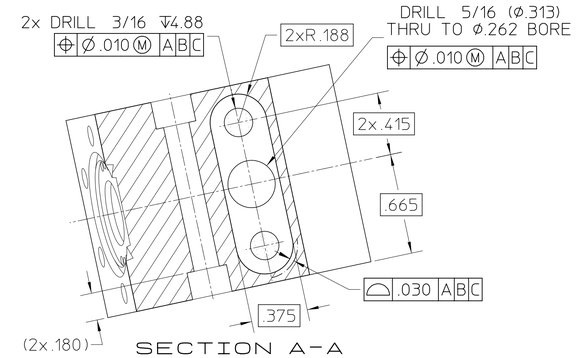

SECTION A-A
SCALE 2/1

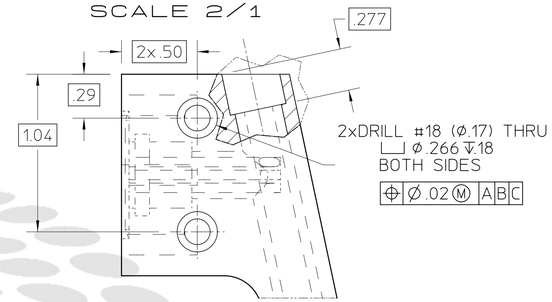

DETAIL 3
SCALE 2/1

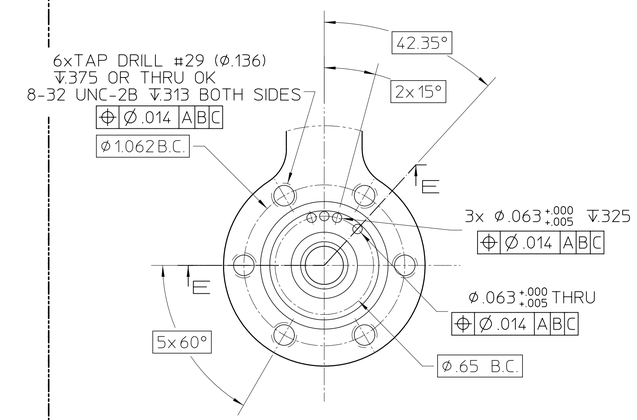

DETAIL 2
TYP BOTH SIDES
SCALE 2/1
STANDARD 1-1/3 MINI-CFF KNIFE EDGE
ROTATED 12° FOR CLARITY

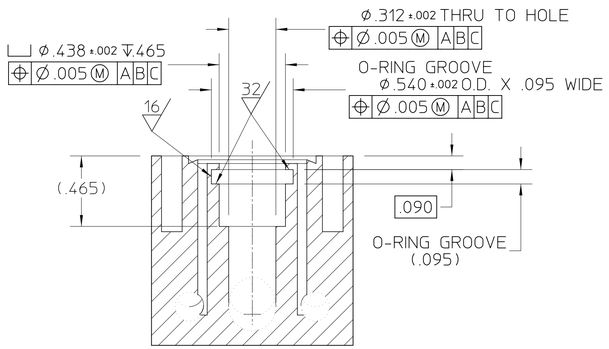

SECTION D-D
SCALE 2/1
STANDARD 1-1/3 MINI-CFF KNIFE EDGE

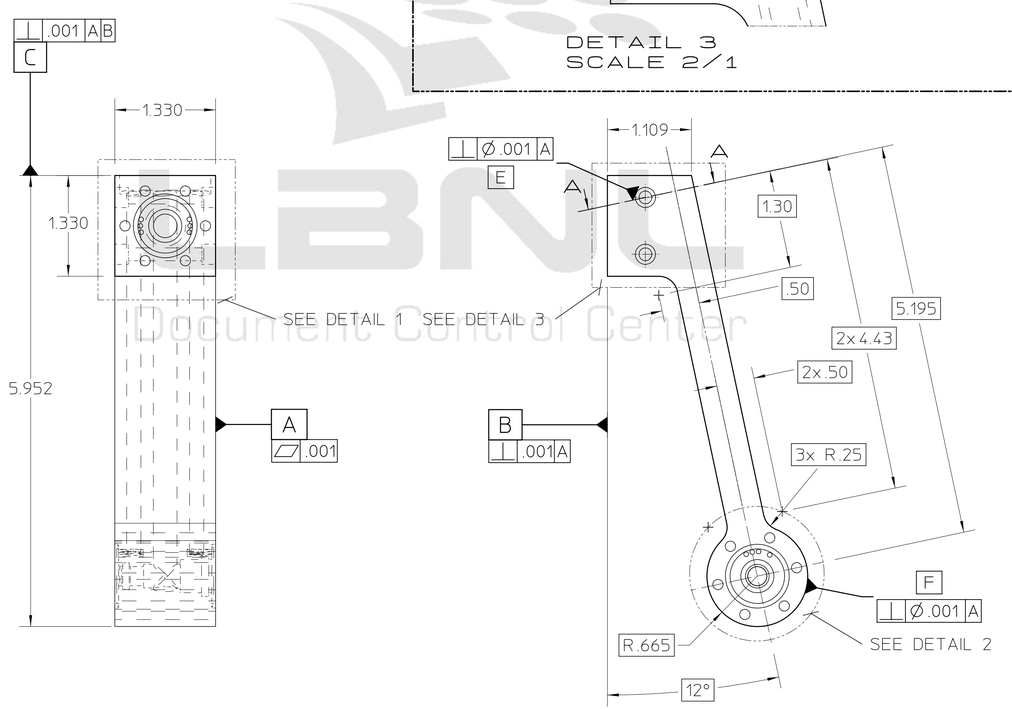

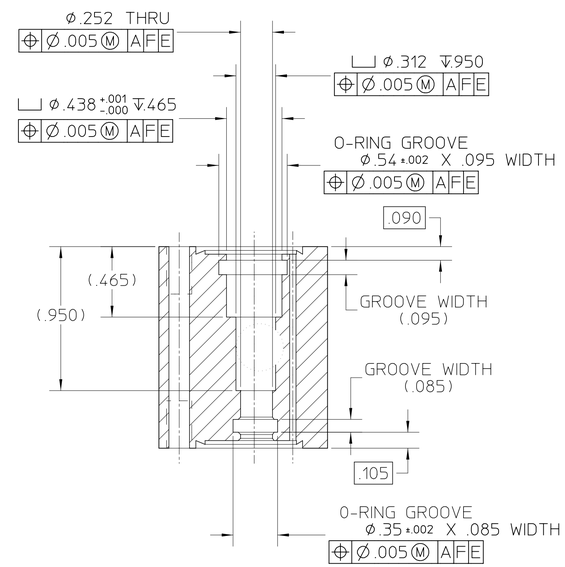

SECTION E-E
SCALE 2/1
STANDARD 1-1/3 MINI-CFF KNIFE EDGE

NOTES. UNLESS OTHERWISE SPECIFIED:

1. DIMENSIONS AND TOLERANCES PER ASME Y14.5M-1994. ALL DIMENSIONS ARE IN INCHES. REFERENCE DIMENSIONS ARE SHOWN IN PARENTHESES. NOT ALL HIDDEN LINES ARE SHOWN.

2. THIS IS AN ULTRA-HIGH VACUUM (UHV) PART AND REQUIRES SPECIAL ATTENTION TO AVOID UHV CONTAMINATION. READ LBNL SPECIFICATION M20013 BEFORE CLEANING.

3. PROTECT FINISHED PART BY BAGGING OR SIMILAR METHOD TO PROTECT AND MAINTAIN CLEANLINESS DURING SHIPMENT AND STORAGE. TAKE CARE NOT TO DING. SCRATCH. DENT. OR OTHERWISE MARK ANY ANY MACHINED SURFACE.

REV	AUTHOR	APPROVER	DATE	CHANGE DESCRIPTION
C	wingert	wingert	06-15-05	CORRECTED DIAMETER DIMENSIONS IN SECTION E-E
B	wingert	wingert	05-23-05	ALTERED .063 HOLE DEPTH.
A	wingert	wingert	04-07-05	INITIAL REVISION

UNLESS OTHERWISE SPECIFIED
TOLERANCES: .X± .06 .XX± .02 .XXX± .005
FRACTIONS: ± 1/64
ANGLES: ± 0.5°/INCH
MACH. SURFS.: 125 ✓ OR BETTER
REF: ASME Y14.5M-1994, THREADS ARE CLASS 2
BREAK EDGES .016 MAX. ON MACHINED WORK
REMOVE BURRS, WELD SPLATTER & LOOSE SCALE

MAT 2: . NOTES:
MAT 1: .SST TYPE 304 NOTES:

PROJECT NAME: Advanced Light Source
UNIQUE NUMBER: AL-0013-1681
DO NOT SCALE PRINT. SCALE: 1 : 1
CATEGORY CODE: AL4045
THIRD ANGLE PROJECTION

ERNEST ORLANDO LAWRENCE
BERKELEY NATIONAL LABORATORY
UNIVERSITY OF CALIFORNIA
ALS - INSERTION DEVICE BEAMLINES
BL 4.0.2 - MONOCHROMATOR
GRATING COOLING, SUPPLY MANIFOLD

SHEET 1 OF 1 | SIZE: D | DWG NO: 26B723 | REV C

AUTO GENERATED PDF
Jun 15 2005 14:21:31 PDT

Officially Released to the LBNL Document Control Center
Released: June 15th, 2005 DCC Auth Key: ZR7Q61JFCD
Downloaded by: David W Plate at June 16, 2005 15:21:16
LBNL Document Control Center