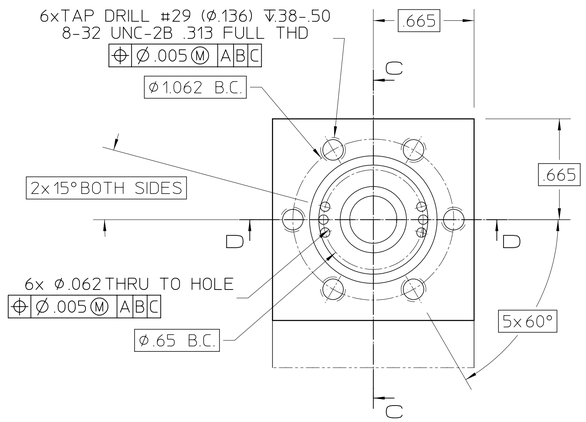

DETAIL 1
SCALE 2/1
STANDARD 1-1/3 MINI-CFF KNIFE EDGE

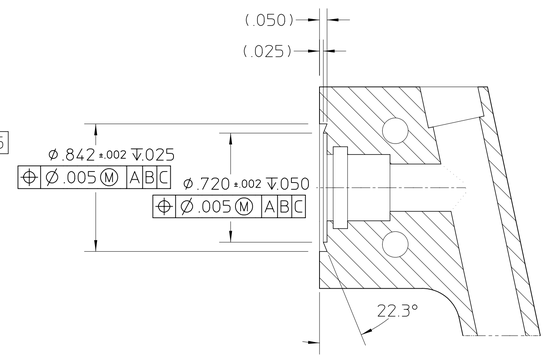

SECTION C-C
TYP 3 PLACES
SCALE 2/1
STANDARD 1-1/3 MINI-CFF KNIFE EDGE

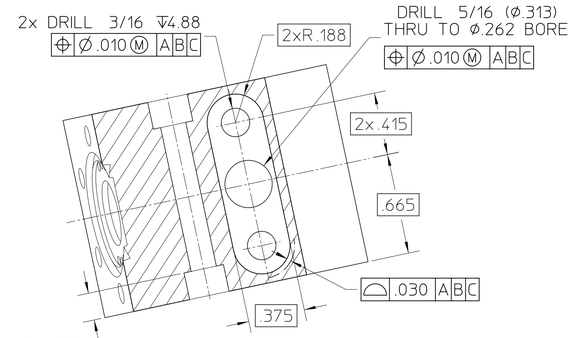

SECTION A-A
SCALE 2/1

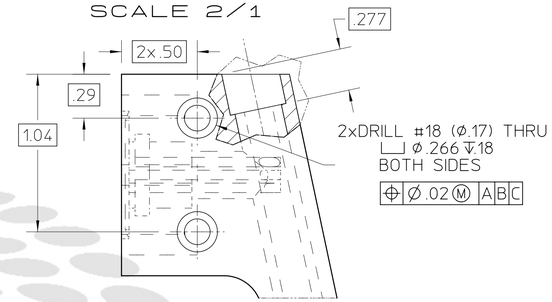

DETAIL 3
SCALE 2/1

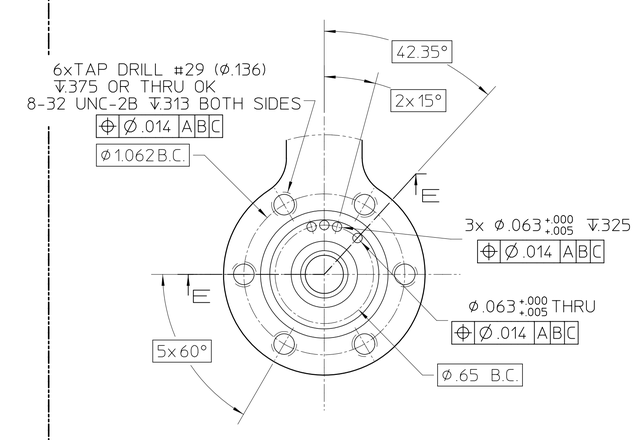

DETAIL 2
TYP BOTH SIDES
SCALE 2/1
STANDARD 1-1/3 MINI-CFF KNIFE EDGE
ROTATED 12° FOR CLARITY

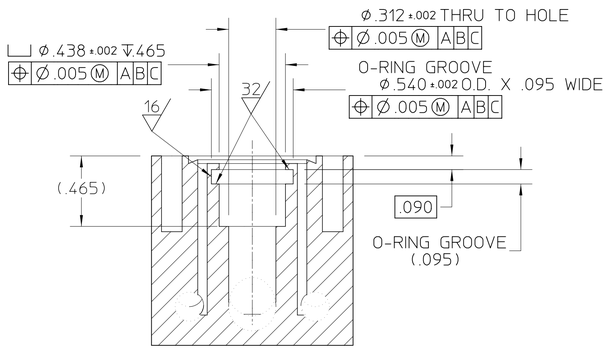

SECTION D-D
SCALE 2/1
STANDARD 1-1/3 MINI-CFF KNIFE EDGE

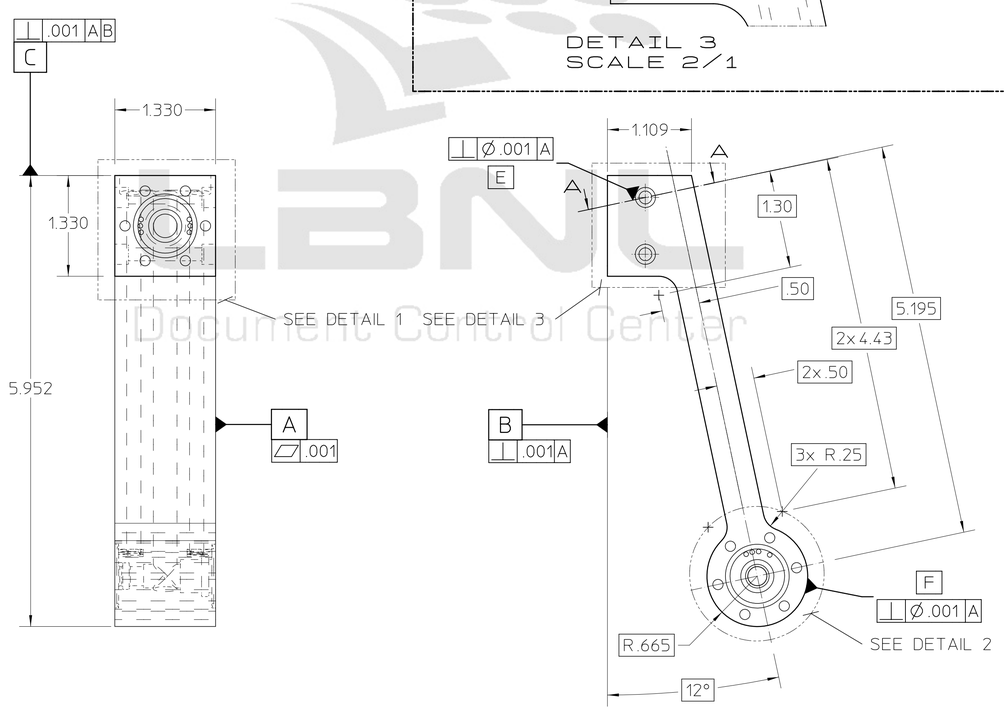

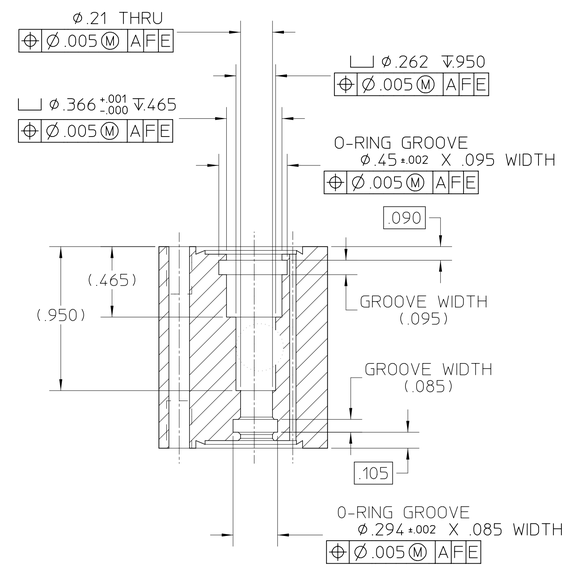

SECTION E-E
SCALE 2/1
STANDARD 1-1/3 MINI-CFF KNIFE EDGE

NOTES. UNLESS OTHERWISE SPECIFIED:

1. DIMENSIONS AND TOLERANCES PER ASME Y14.5M-1994. ALL DIMENSIONS ARE IN INCHES. REFERENCE DIMENSIONS ARE SHOWN IN PARENTHESES. NOT ALL HIDDEN LINES ARE SHOWN.

2. THIS IS AN ULTRA-HIGH VACUUM (UHV) PART AND REQUIRES SPECIAL ATTENTION TO AVOID UHV CONTAMINATION. READ LBNL SPECIFICATION M20013 BEFORE CLEANING.

3. PROTECT FINISHED PART BY BAGGING OR SIMILAR METHOD TO PROTECT AND MAINTAIN CLEANLINESS DURING SHIPMENT AND STORAGE. TAKE CARE NOT TO DING. SCRATCH. DENT. OR OTHERWISE MARK ANY ANY MACHINED SURFACE.

REV	AUTHOR	APPROVER	DATE	CHANGE DESCRIPTION
B	wingert	wingert	05-23-05	ALTERED .063 HOLE DEPTH.
A	wingert	wingert	04-07-05	INITIAL REVISION

UNLESS OTHERWISE SPECIFIED
TOLERANCES: .X± .06 .XX± .02 .XXX± .005
FRACTIONS: ± 1/64
ANGLES: ± 0.5°/INCH
MACH. SURFS.: 125✓ OR BETTER
REF: ASME Y14.5M-1994, THREADS ARE CLASS 2
BREAK EDGES .016 MAX. ON MACHINED WORK
REMOVE BURRS, WELD SPLATTER & LOOSE SCALE

MAT 2: . NOTES:
MAT 1: .SST TYPE 304 NOTES:

PROJECT NAME: Advanced Light Source
UNIQUE NUMBER: AL-0013-1681
DO NOT SCALE PRINT. CATEGORY CODE: AL4045
SCALE: 1 : 1
THIRD ANGLE PROJECTION

ERNEST ORLANDO LAWRENCE
BERKELEY NATIONAL LABORATORY
UNIVERSITY OF CALIFORNIA
ALS - INSERTION DEVICE BEAMLINES
BL 4.0.2 - MONOCHROMATOR
GRATING COOLING, SUPPLY MANIFOLD

SHEET 1 OF 1 SIZE: D DWG NO: 26B723 REV B

AUTO GENERATED PDF
May 23 2005 12:01:54 PDT

Officially Released to the LBNL Document Control Center
Released: May 23rd, 2005 DCC Auth Key: KAQO4FTLMW
Downloaded by: David W Plate at June 02, 2005 08:43:17