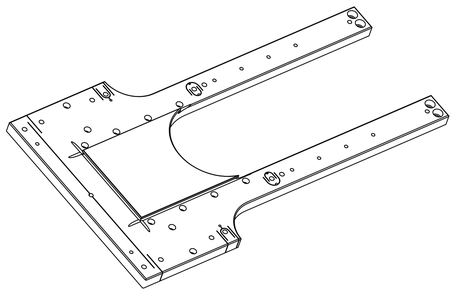

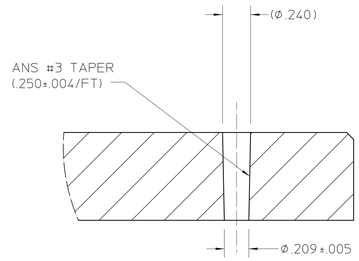


PARTIAL SECTION B-B
SCALE 2:1
TYP 2 PLACES

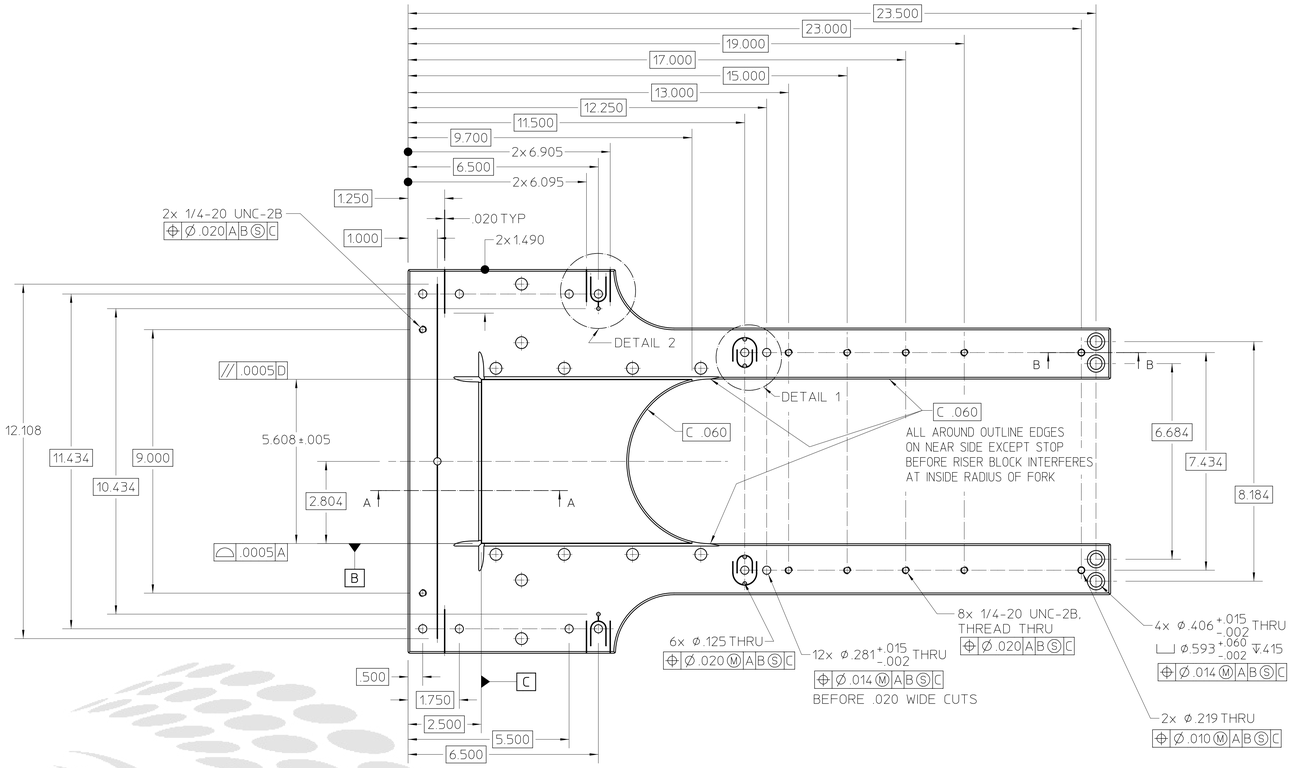


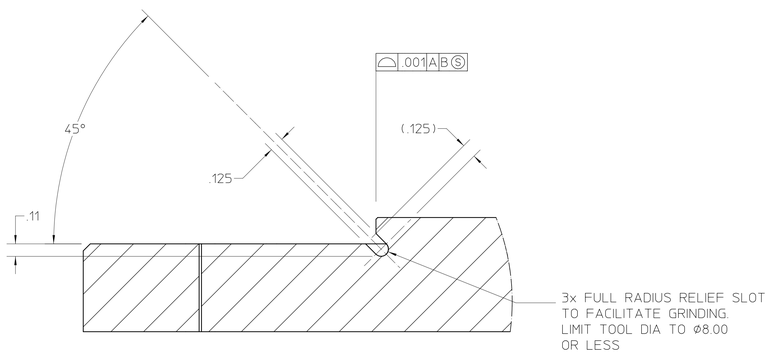


PARTIAL SECTION A-A
SCALE 2:1

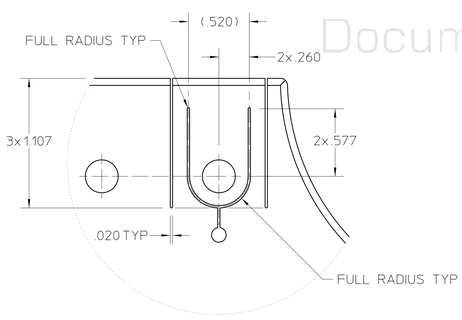


DETAIL 2
SCALE 2:1
ONE PLACE AS SHOWN
ONE PLACE OPPOSITE HAND

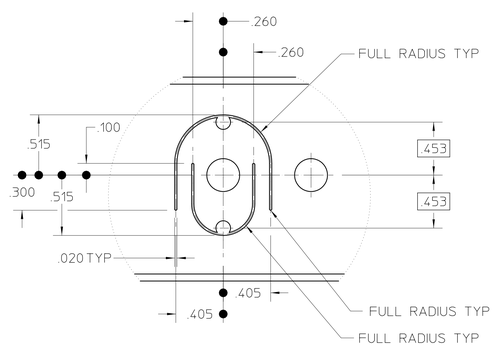


DETAIL 1
SCALE 2:1
ONE PLACE AS SHOWN
ONE PLACE OPPOSITE HAND

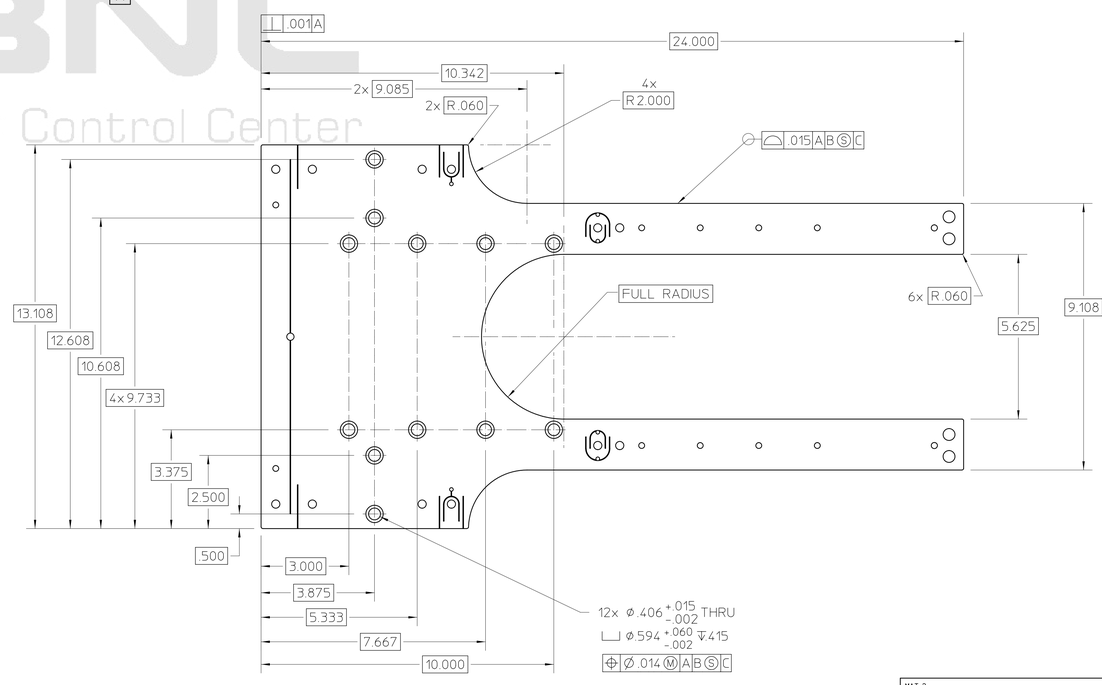


26A8376C

NOTES, UNLESS OTHERWISE SPECIFIED

1. DIMENSIONING & TOLERANCING PER ASME Y14.5M - 1994. ALL DIMENSIONS ARE IN INCHES. REFERENCE DIMENSIONS ARE SHOWN IN PARENTHESES. NOT ALL HIDDEN LINES ARE SHOWN.

2. SURFACE TREATMENT; THIS IS A UHV PART, CLEAN AND HANDLE PER LBL SPECIFICATION 3M775B.

| REV | ZONE | CHANGES | DWG BY | DATE | CHK BY | DATE | APP BY | DATE |
|---|---|---|---|---|---|---|---|---|
| C | | ADD DIM 7.434, DATUM B WAS D | patton | 03-31-2004 | N/A | | patton | 04-01-2004 |
| CB | MP | PROVE PRECISION FOR ASSY REPEATAB | patton | 07-09-2003 | | | | |

UNLESS OTHERWISE SPECIFIED
TOLERANCES: X ± - FRAC. ± - ; XX ± .020 ANGLES ± .5° ; XXX ± .005 FINISH 32√
THREADS ARE CLASS 2
CHAMFER ENDS OF ALL SCREW THREADS 30° OUT 1.5 PITCH TWO RELIEF WITH ROUND NOSE TOOL ON MACHINE CUT THREADS.
BREAK EDGES .016 MAX. ON MACHINED WORK
REMOVE BURRS WELD SPLATTER & LOOSE SCALE
REFERENCES: ANSI Y14.5 & B46.1.

SHOP ORDERS
ACCT. NO. | SERIAL NO.
DATE ISSD. | DATE REQD. | NO. REQD.
DELIVER TO | IDENT METH | SEE NOTES
SURFACE TREATMENT: SEE NOTES
DWG BY: patton | DATE: 04-25-2003
CHK BY: patton | DATE: 12-19-2003
APP BY: patton | DATE: 12-19-2003

MAT 2: . | NOTES:
MAT 1: .INVAR 36 PLATE | NOTES:

LAWRENCE BERKELEY LABORATORY
UNIVERSITY OF CALIFORNIA-BERKELEY
ALS - INSERTION DEVICE BEAMLINES
BL 11.0.1 MONOCHROMATOR
CRADLE STAND BASE PLATE

| PATENT CLEAR | DWG. TYPE | SHOWN ON | SCALE | DO NOT SCALE PRINTS |
|---|---|---|---|---|
| | DETAIL | 26A7996 | 1:2 | |
| MICROFILMED | DESIGN ACCT. NO. | CATEGORY CODE | DWG. NO. | SIZE / REV. |
| | - | AL4153 | 26A8376 | C |

SHEET 1 OF 1

AUTO GENERATED PDF – Apr 01 2004 14:31:38 PST

Officially Released to the LBNL Document Control Center
Released: April 1st, 2004 DCC Auth Key: 62XK0XL5W1
Downloaded by: David W Plate at April 13, 2005 12:52:54