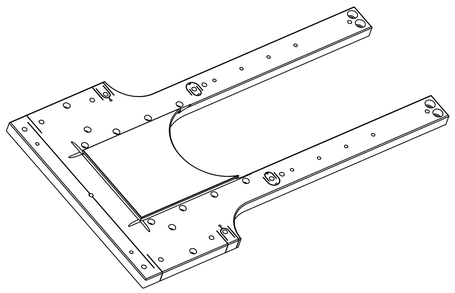

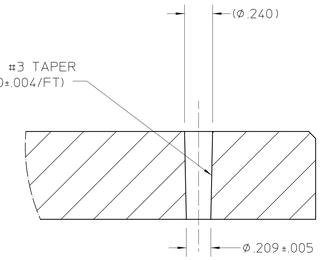

PARTIAL SECTION B-B
SCALE 2:1
TYP 2 PLACES

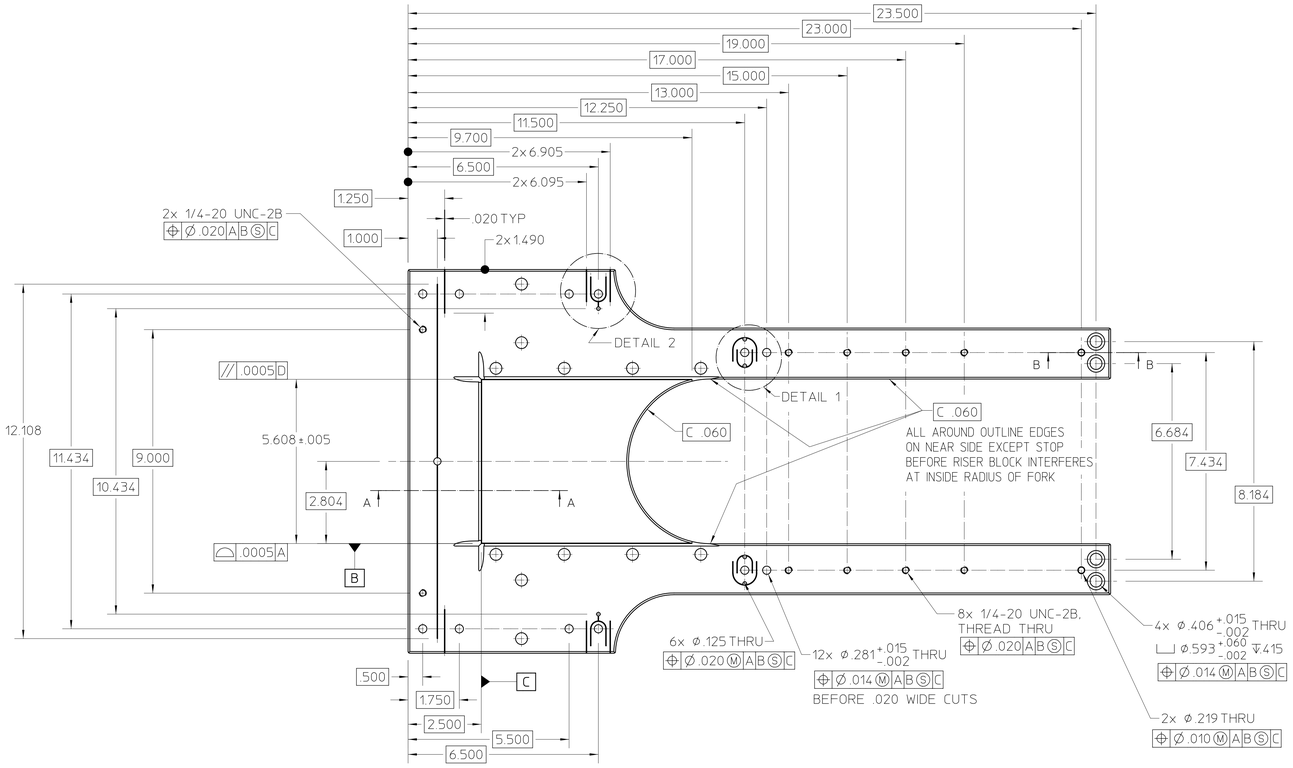

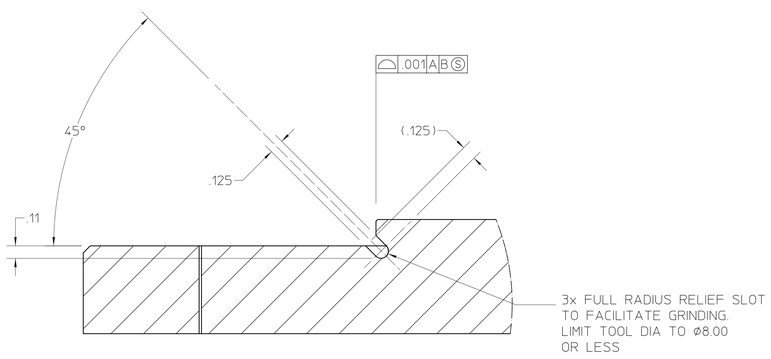

PARTIAL SECTION A-A
SCALE 2:1

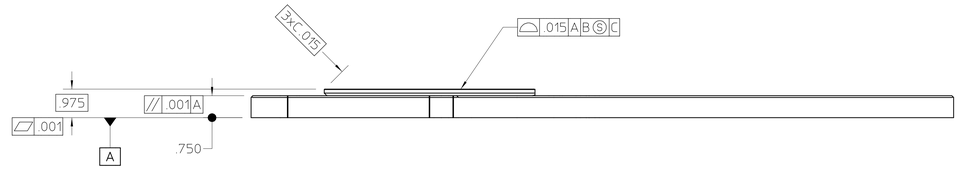

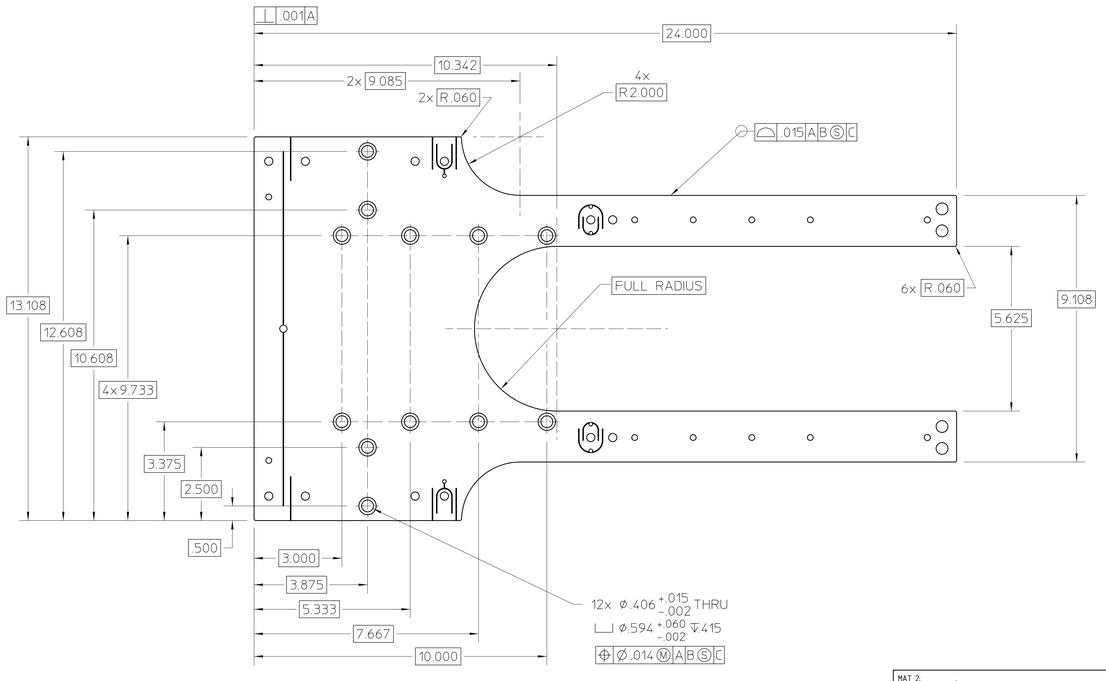

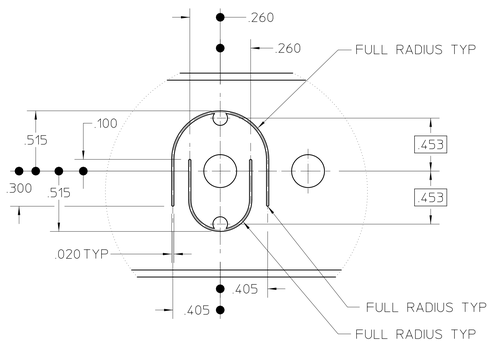

DETAIL 1
SCALE 2:1
ONE PLACE AS SHOWN
ONE PLACE OPPOSITE HAND

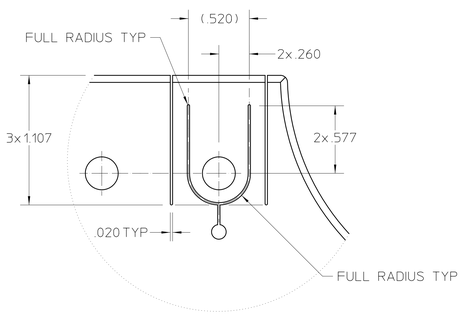

DETAIL 2
SCALE 2:1
ONE PLACE AS SHOWN
ONE PLACE OPPOSITE HAND

NOTES, UNLESS OTHERWISE SPECIFIED

1. DIMENSIONING & TOLERANCING PER ASME Y14.5M - 1994. ALL DIMENSIONS ARE IN INCHES. REFERENCE DIMENSIONS ARE SHOWN IN PARENTHESES. NOT ALL HIDDEN LINES ARE SHOWN.

2. SURFACE TREATMENT; THIS IS A UHV PART, CLEAN AND HANDLE PER LBL SPECIFICATION 3M775B.

REV	ZONE	CHANGES	DWG BY	DATE	CHK BY	DATE	APP BY	DATE
C		ADD DIM 7.434, DATUM B WAS D	patton	03-31-2004	N/A		patton	04-01-2004
CB	MP	PROVE PRECISION FOR ASSY REPEATAB	patton	07-09-2003				

UNLESS OTHERWISE SPECIFIED
TOLERANCES: X ± - FRAC. ± - ; XX ± .020 ANGLES ± .5° ; XXX ± .005 FINISH 32√
THREADS ARE CLASS 2
CHAMFER ENDS OF ALL SCREW THREADS 30° OUT 1.5 PITCH TWO RELIEF WITH ROUND NOSE TOOL ON MACHINE CUT THREADS.
BREAK EDGES .016 MAX. ON MACHINED WORK.
REMOVE BURRS WELD SPLATTER & LOOSE SCALE
REFERENCES: ANSI Y14.5 & B46.1.

SHOP ORDERS
ACCT. NO. | SERIAL NO.
DATE ISSD. | DATE REQD. | NO. REQD.
DELIVER TO | IDENT METH | SEE NOTES
SURFACE TREATMENT: SEE NOTES
DWG BY: patton DATE: 04-25-2003
CHK BY: patton DATE: 12-19-2003
APP BY: patton DATE: 12-19-2003

MAT 2: . NOTES:
MAT 1: .INVAR 36 PLATE NOTES:

LAWRENCE BERKELEY LABORATORY
UNIVERSITY OF CALIFORNIA-BERKELEY
ALS - INSERTION DEVICE BEAMLINES
BL 11.0.1 MONOCHROMATOR
CRADLE STAND BASE PLATE

PATENT CLEAR	DWG. TYPE	SHOWN ON	SCALE	DO NOT SCALE PRINTS
	DETAIL	26A7996	1:2	
MICROFILMED	DESIGN ACCT. NO.	CATEGORY CODE	DWG. NO.	SIZE / REV.
	-	AL4153	26A8376	C

26A8376C

SHEET 1 OF 1

AUTO GENERATED PDF – Apr 01 2004 14:31:38 PST