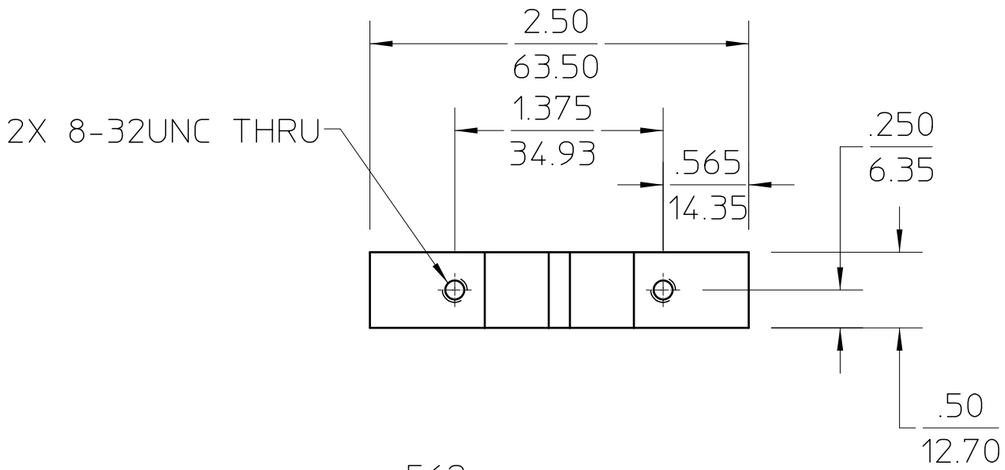

NOTES,UNLESS OTHERWISE SPECIFIED:

1. THIS IS A ULTRA HIGH VACUUM COMPONENT AND REQUIRES SPECIAL ATTENTION TO AVOID CONTAMINATION. REFER TO LBNL ENGINEERING SPECIFICATION #M20013. HIGH VACUUM USE CLEANING.

2. TOLERANCES SHOWN IN TITLE BLOCK ARE IN INCHES.

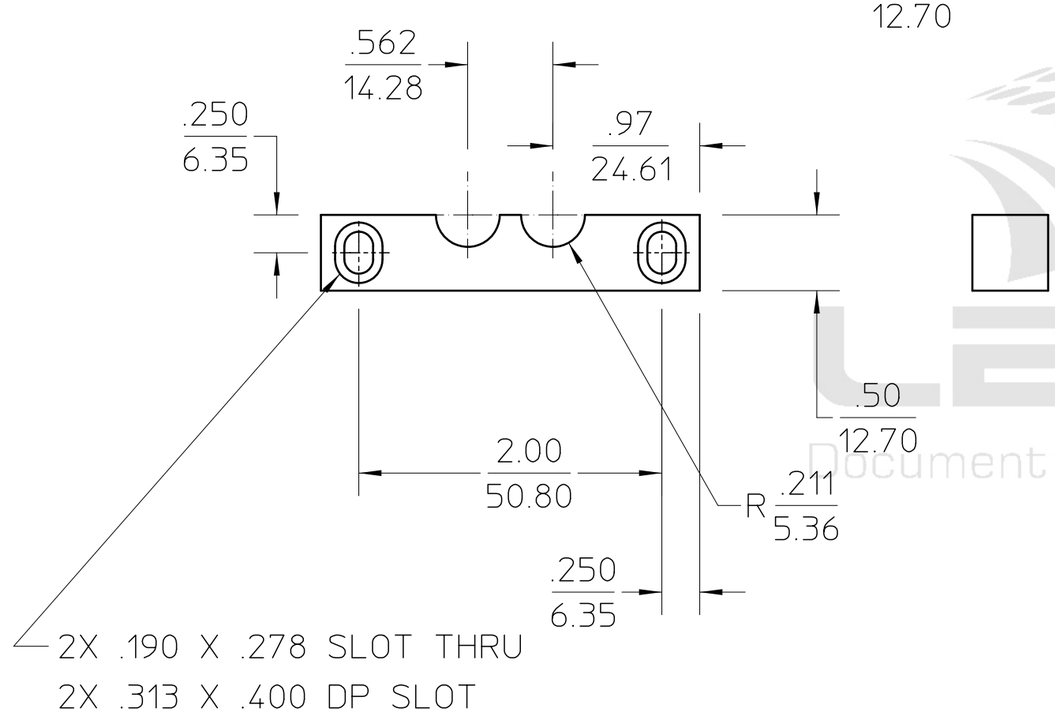

(UNIQUE ID NO.:AL-0008-9570)

REV	AUTHOR	APPROVER	DATE	CHANGE DESCRIPTION
A	rawlins	plate	07-26-20	INITIAL REVISION

UNLESS OTHERWISE SPECIFIED

TOLERANCES: .X± .03 .XX±.02 .XXX±.010; FRACTIONS: ± -/--; ANGLES: ± 2°; MACH. SURFS.: 125✓ OR BETTER

REF:ASME Y14.5M-1994, THREADS ARE CLASS 2

BREAK EDGES .016 MAX. ON MACHINED WORK

REMOVE BURRS, WELD SPLATTER & LOOSE SCALE

MAT 2: ,

MAT 1: ALUMINUM, 6061-T6

NOTES:

NOTES: CLEAR ANODIZE

PROJECT NAME:

PROJECT NUMBER:

DO NOT SCALE PRINT

SCALE: 1 : 1

CATEGORY CODE: AL 4160

THIRD ANGLE PROJECTION

ERNEST ORLANDO LAWRENCE BERKELEY NATIONAL LABORATORY
UNIVERSITY OF CALIFORNIA

ALS - INSERTION DEVICE BEAMLINES

BL 6.0 FRONT END

TUBE CLAMP BOTTOM

SHEET 1 OF 1 | SIZE: B | DWG NO: 26B592 | REV A

Officially Released to the LBNL Document Control Center
Released: July 26th, 2004 DCC Auth Key: E8XIRBFOV0

Downloaded by: Daniel Pulsifer at December 01, 2004 14:27:02

LBNL Document Control Center

AUTO GENERATED PDF
Jul 27 2004 14:00:16 PDT