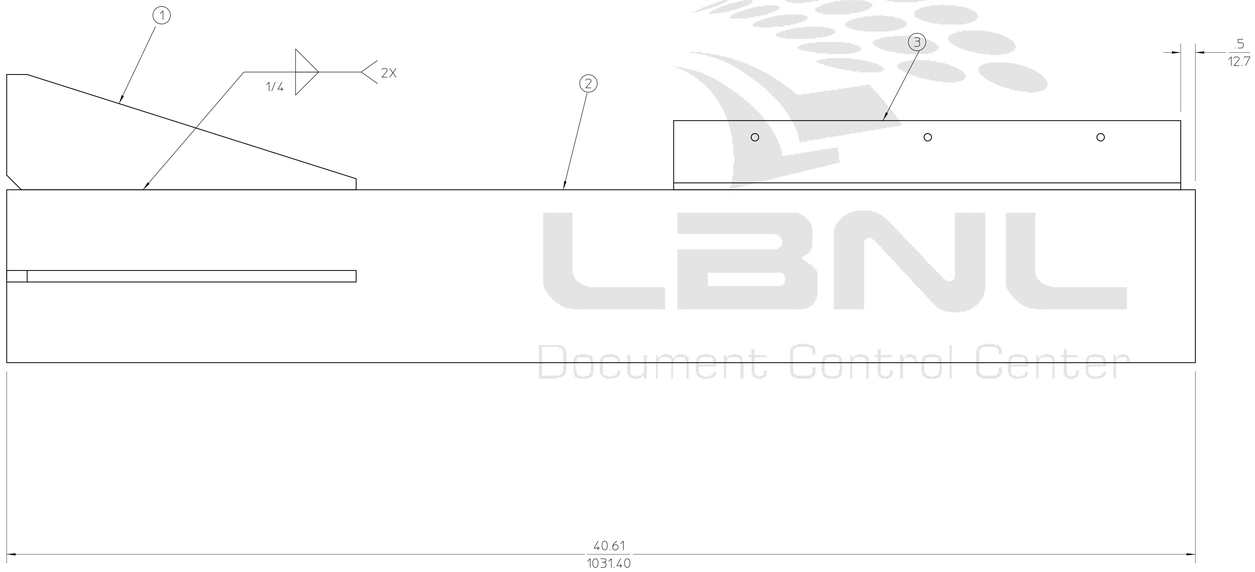

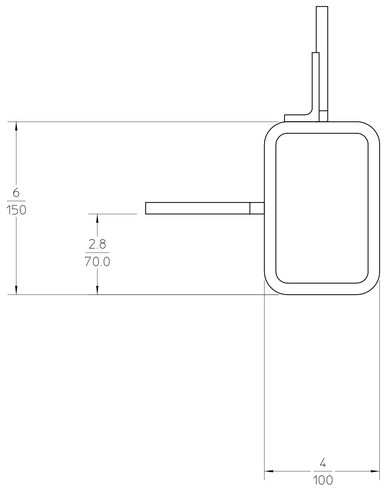

LBNL
Document Control Center

NOTES,UNLESS OTHERWISE SPECIFIED:

1. TOLERANCES SHOWN IN TITLE BLOCK ARE IN INCHES.

(UNIQUE ID NO.:AL-0011-5284)

REQD	ITEM	PART NO.	DESCRIPTION
1	3	26B576	FLOW METER MOUNTING ANGLE
1	2		RECTANGULAR TUBING,ASTM-A36,6" X 4" X 1/4"
2	1	26B577	GUSSET AT BASE PLATE

REV	AUTHOR	APPROVER	DATE	CHANGE DESCRIPTION
A	rawlins	plate	07-26-20	INITIAL REVISION

UNLESS OTHERWISE SPECIFIED
TOLERANCES: .X± .1 .XX± .06 .XXX± .030
FRACTIONS: ± -/--
ANGLES: ± 3°
MACH. SURFS.: 125 OR BETTER
REF:ASME Y14.5M-1994, THREADS ARE CLASS 2
BREAK EDGES .016 MAX. ON MACHINED WORK
REMOVE BURRS, WELD SPLATTER & LOOSE SCALE

PROJECT NAME:
PROJECT NUMBER:
DO NOT SCALE PRINT
SCALE: 1 : 2
CATEGORY CODE: AL 4160
THIRD ANGLE PROJECTION

ERNEST ORLANDO LAWRENCE
BERKELEY NATIONAL LABORATORY
UNIVERSITY OF CALIFORNIA
ALS - INSERTION DEVICE BEAMLINES
BL 6.0 FRONT END
COLUMN 2 SUB-ASSEMBLY
SHEET 1 OF 1 SIZE: E DWG NO: 26B578 REV A

Officially Released to the LBNL Document Control Center
Released: July 26th, 2004 DCC Auth Key: XFGH5C7MSM
Downloaded by: Daniel Pulsifer at December 01, 2004 14:27:02
AUTO GENERATED PDF
Jul 27 2004 14:07:19 PDT