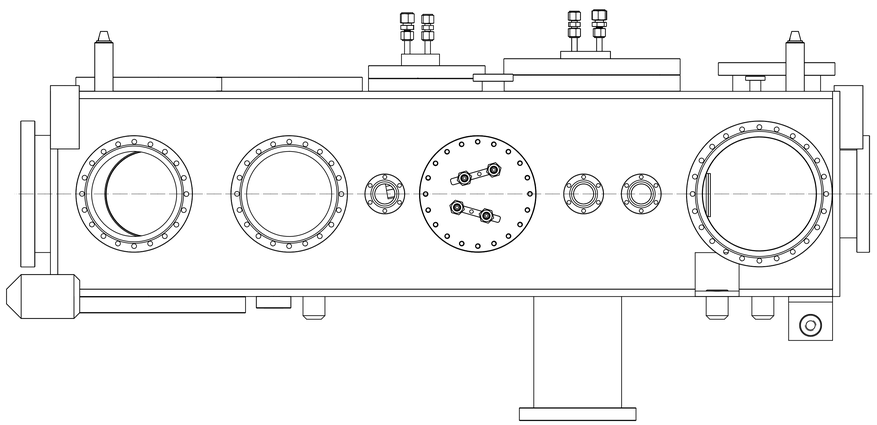

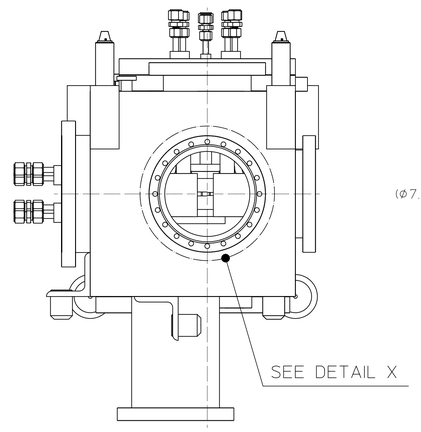

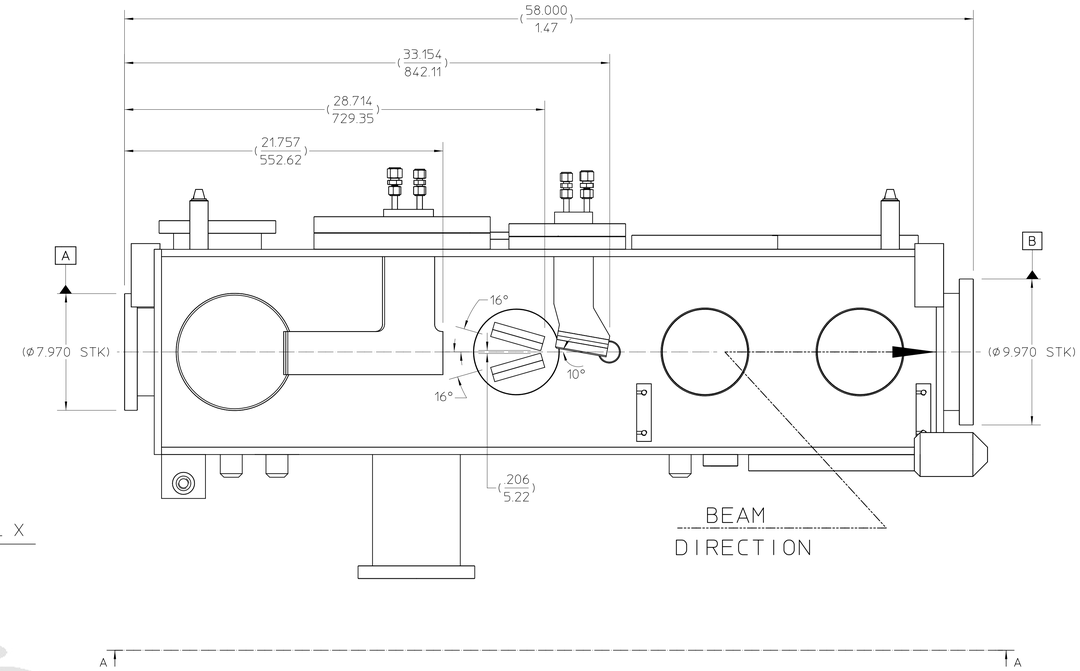

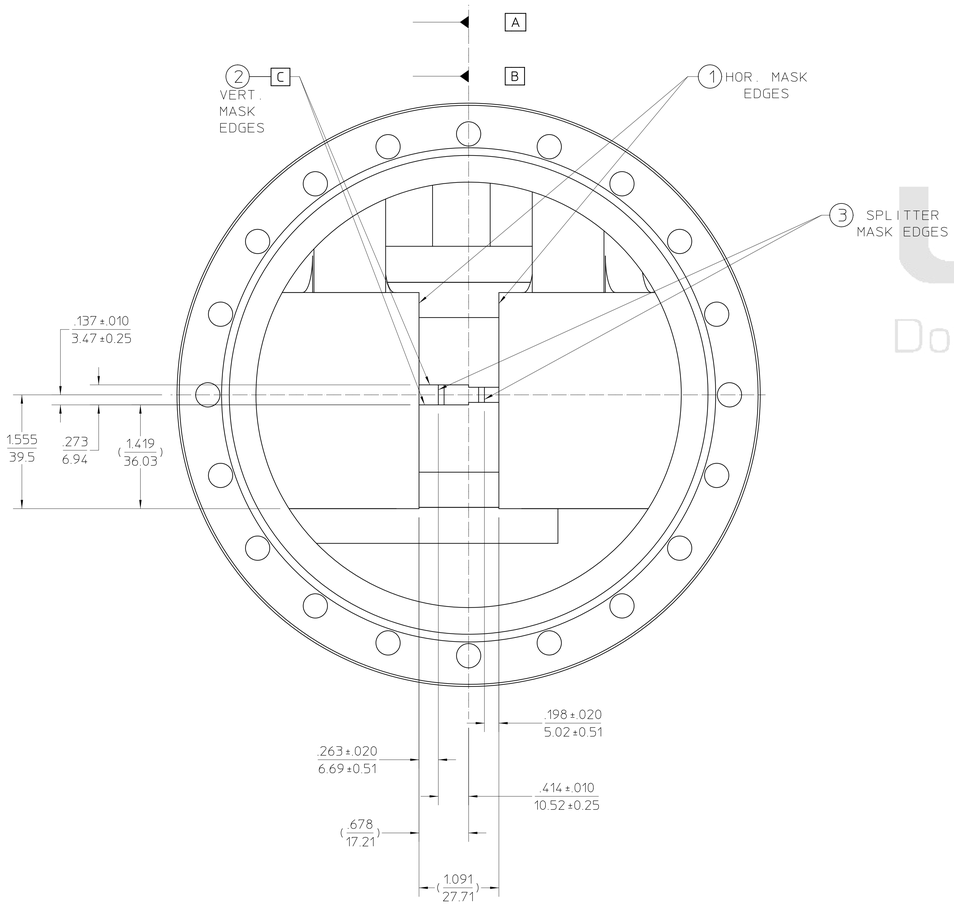

DETAIL X

SCALE 1.25:1

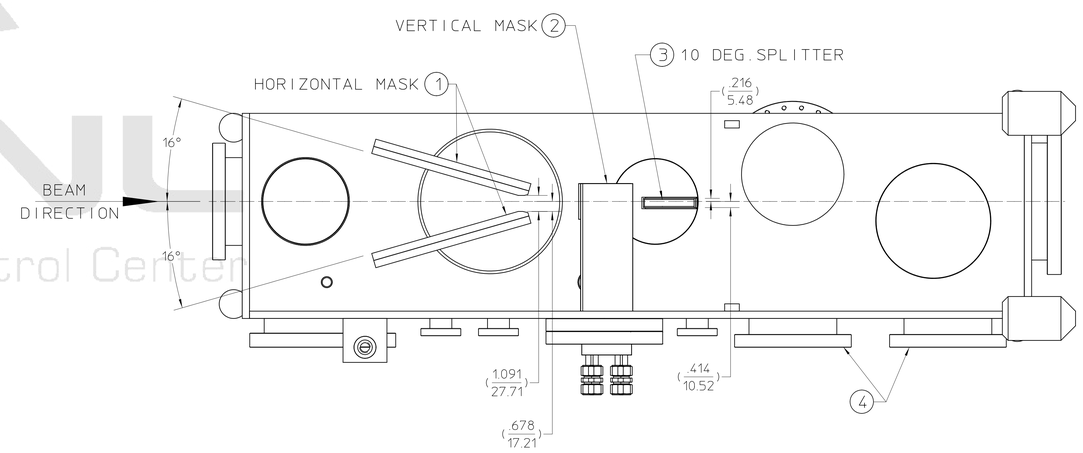

VIEW A-A

(BOTTOM PLATE REMOVED FOR THIS CHAMBER VIEW)

NOTES:

1. REFER TO MASKS ASSEMBLY DRAWINGS ITEMS, #1, 2 & 3.

2. TOLERANCES SHOWN IN THE DRAWING TITLE BOX ARE SHOWN IN INCHES. DIMENSIONS ARE SHOWN IN INCHES/MILLIMETERS. (UPPER/ LOWER)

(UNIQUE ID No.: AL-0011-5588)

REQD	ITEM	PART NO.	DESCRIPTION
-	-	-	-
-	-	-	-
REF	5	26B603	PSS ACTUATORS VACUUM CHAMBER ALIGNMENT ASSEMBLY
REF	4	26B192	VACUUM CHAMBER WELDMENT
1	3	26B523	10 DEG. SPLITTER MASK WELDMENT ASSEMBLY
1	2	26B512	VERTICAL APERTURE MASK WELDMENT ASSEMBLY
1	1	26B502	HORIZONTAL APERTURE MASK WELDMENT ASSEMBLY

REV	AUTHOR	APPROVER	DATE	CHANGE DESCRIPTION
A	cummings	plate	07-27-20	INITIAL REVISION

UNLESS OTHERWISE SPECIFIED
TOLERANCES: X± - XX± .04 .XXX± .020
FRACTIONS: ± -/--
ANGLES: ± 0.25°/INCH
MACH. SURFS.: 63 ✓ OR BETTER
REF: ASME Y14.5M-1994, THREADS ARE CLASS 2
BREAK EDGES .016 MAX. ON MACHINED WORK
REMOVE BURRS, WELD SPLATTER & LOOSE SCALE

PROJECT NAME:
PROJECT NUMBER:
DO NOT SCALE PRINT
CATEGORY CODE: AL 4160
SCALE: 1 : 4
THIRD ANGLE PROJECTION

ERNEST ORLANDO LAWRENCE BERKELEY NATIONAL LABORATORY
UNIVERSITY OF CALIFORNIA

ALS - INSERTION DEVICE BEAMLINES
BL 6.0 FRONT END
PS/PSS APERTURE MASKS CHAMBER ALIGNMENT ASSEMBLY

SHEET 1 OF 1 | SIZE: E | DWG NO: 26B541 | REV: A

Officially Released to the LBNL Document Control Center
Released: July 27th, 2004 DCC Auth Key: FETVYKD5AU
Downloaded by: Daniel Pulsifer at December 01, 2004 14:27:00
AUTO GENERATED PDF
Jul 27 2004 16:01:38 PDT