Daryl Oshatz

Tom Peterson

DULIE-
General comments:
1) call out metric tube in round metric dims on the pipe details.

2) I haven't marked up sheets 10-12 in great detail because we haven't decided whether to cut them out of the package. Any details and dims we leave at that this level should be reference.

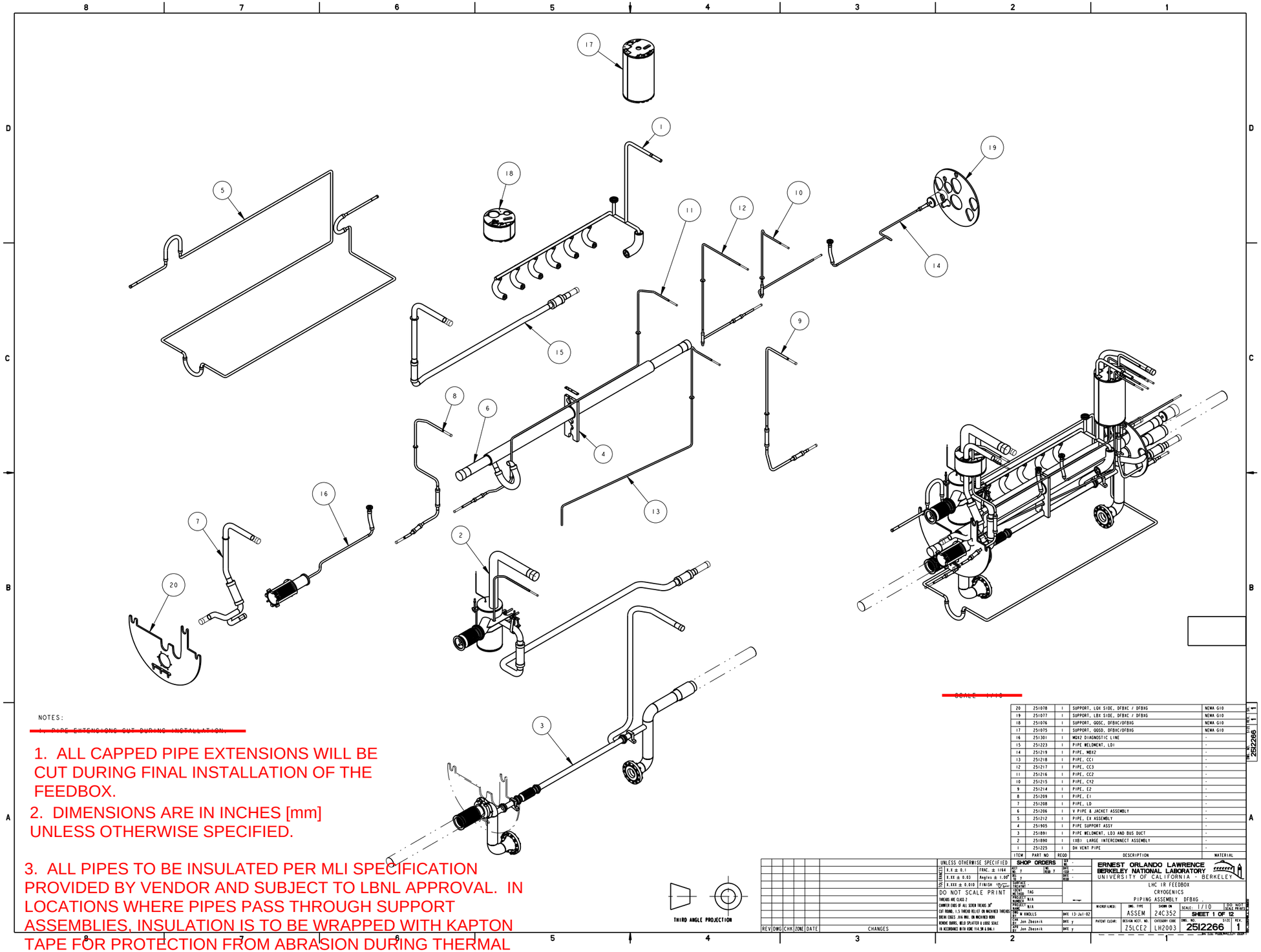

NOTES:

~~1. PIPE EXTENSIONS CUT DURING INSTALLATION.~~

1. ALL CAPPED PIPE EXTENSIONS WILL BE CUT DURING FINAL INSTALLATION OF THE FEEDBOX.
2. DIMENSIONS ARE IN INCHES [mm] UNLESS OTHERWISE SPECIFIED.
3. ALL PIPES TO BE INSULATED PER MLI SPECIFICATION PROVIDED BY VENDOR AND SUBJECT TO LBNL APPROVAL. IN LOCATIONS WHERE PIPES PASS THROUGH SUPPORT ASSEMBLIES, INSULATION IS TO BE WRAPPED WITH KAPTON TAPE FOR PROTECTION FROM ABRASION DURING THERMAL CYCLING.

~~DONE ???~~

ITEM	PART NO.	REQD	DESCRIPTION	MATERIAL
20	251078	1	SUPPORT, LQX SIDE, DFBXC / DFBXG	NEMA G10
19	251077	1	SUPPORT, LBX SIDE, DFBXC / DFBXG	NEMA G10
18	251076	1	SUPPORT, QQSC, DFBXC/DFBXG	NEMA G10
17	251075	1	SUPPORT, QQSD, DFBXC/DFBXG	NEMA G10
16	251301	1	MBX2 DIAGNOSTIC LINE	-
15	251223	1	PIPE WELDMENT, LD1	-
14	251219	1	PIPE, MBX2	-
13	251218	1	PIPE, CC1	-
12	251217	1	PIPE, CC3	-
11	251216	1	PIPE, CC2	-
10	251215	1	PIPE, C12	-
9	251214	1	PIPE, E2	-
8	251209	1	PIPE, E1	-
7	251208	1	PIPE, LD	-
6	251206	1	V PIPE & JACKET ASSEMBLY	-
5	251212	1	PIPE, E1 ASSEMBLY	-
4	251905	1	PIPE SUPPORT ASSY	-
3	251891	1	PIPE WELDMENT, LD3 AND BUS DUCT	-
2	251890	1	(XB) LARGE INTERCONNECT ASSEMBLY	-
1	251225	1	DH VENT PIPE	-

SHEET 1 OF 1 — DWG NO. 2512266

THIRD ANGLE PROJECTION

REV	DWG	CHK	ZONE	DATE	CHANGES

UNLESS OTHERWISE SPECIFIED
TOLERANCES: X.X ± 0.1 FRAC. ± 1/64; X.XX ± 0.03 Angles ± 1.00°; X.XXX ± 0.010 FINISH
DO NOT SCALE PRINT
THREADS ARE CLASS 2
CHAMFER ENDS OF ALL SCREW THREADS 30°
CUT BOARD, 1.5 THREAD RELIEF ON MACHINED THREADS
BREAK EDGES .010 MAX. ON MACHINED NON-SCREW THREADS
REMOVE BURRS, WELD SPLATTER & LOOSE SCALE
IN ACCORDANCE WITH ASME Y14.36 & Y14.1

SHOP ORDERS
QTY: 1 — NO. ITEMS: y
MATL: -
HEAT TREATING: -
PLATING: -
PAINT: -
PROJECT: N/A
DRAWN: W KNOLLS — DATE 13-Jul-02
CHK'D: Jon Zbasnik — DATE y
APP'D: Jon Zbasnik — DATE y

ERNEST ORLANDO LAWRENCE BERKELEY NATIONAL LABORATORY
UNIVERSITY OF CALIFORNIA - BERKELEY
LHC IR FEEDBOX
CRYOGENICS
PIPING ASSEMBLY DFBXG

MICROFILMED:	DWG. TYPE	SHOWN ON	SCALE: 1/10	DO NOT SCALE PRINT
	ASSEM	24C352	SHEET 1 OF 12	
PATENT CLEAR:	DESIGN ACCT. NO.	CATEGORY CODE	DWG. NO.	SIZE / REV.
	25LCE2	LH2003	2512266	1

NAME:ARHARRIS OBJECT:251226_I DATE:13-Jul-02 20:36:39

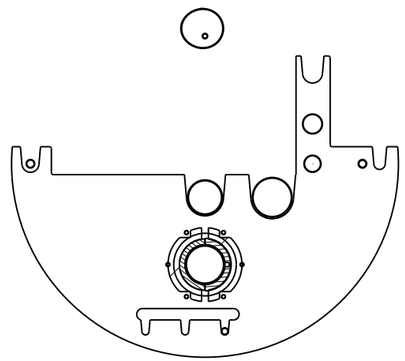

SEE NOTE 3

SECTION A - A
SCALE 1/4

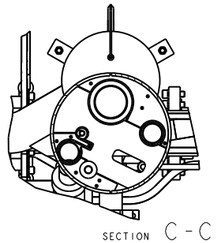

SECTION C - C
SCALE 1/4

SEE NOTE 3

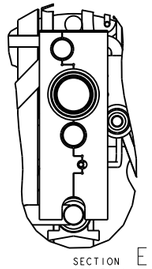

SECTION E - E
SCALE 1/4

SEE NOTE 3

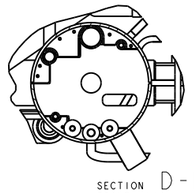

SECTION D - D
SCALE 1/4

SEE NOTE 3

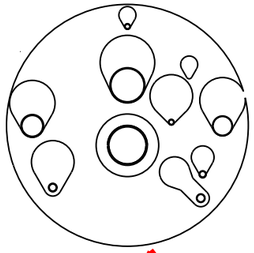

SEE NOTE 3

SECTION B - B
SCALE 1/4

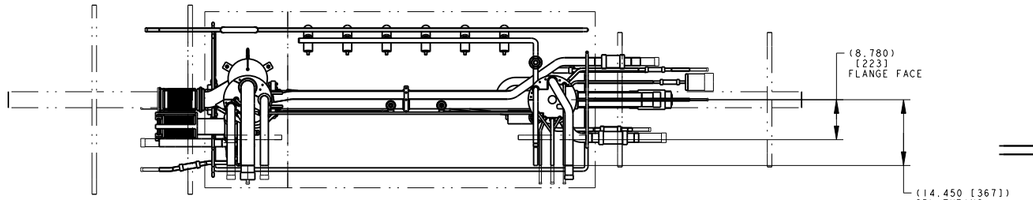

INTERCONNECT

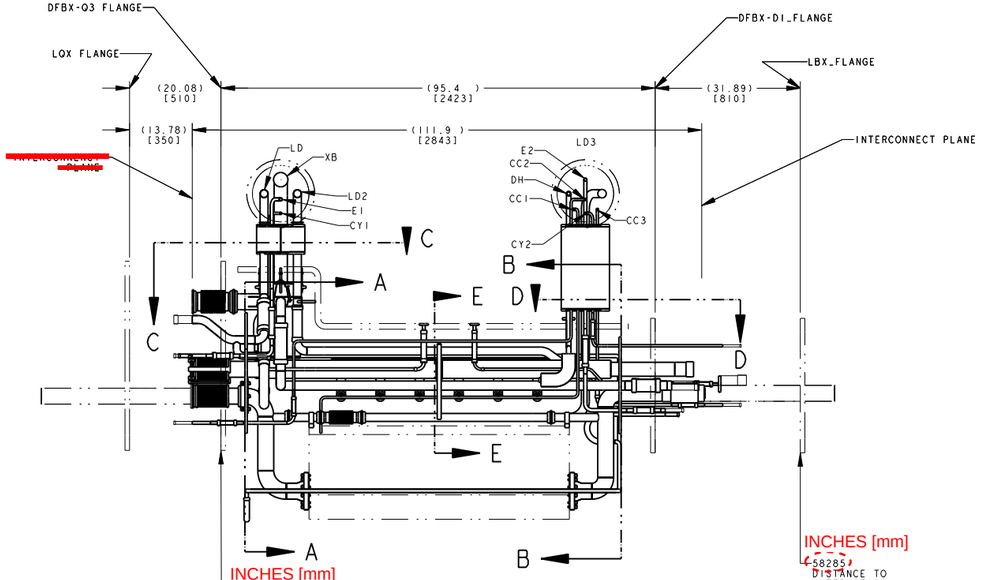

INCHES [mm]
55052
DISTANCE TO
INTERACTION
POINT

INCHES [mm]
58285
DISTANCE TO
INTERACTION
POINT

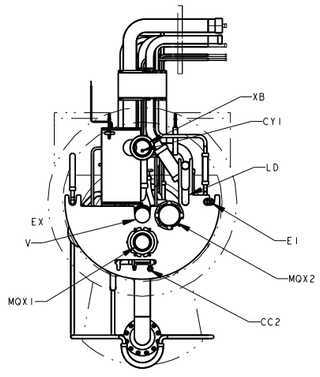

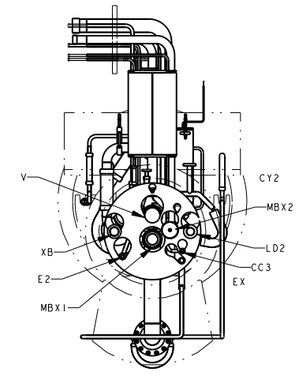

THIRD ANGLE PROJECTION

ERNEST ORLANDO LAWRENCE
BERKELEY NATIONAL LABORATORY
UNIVERSITY OF CALIFORNIA · BERKELEY

LHC IR FEEDBOX
CRYOGENICS
PIPING ASSEMBLY DFBXG

MICROFILMED:	DWG. TYPE: ASSEM	SHOWN ON: 24C352	SCALE: 1/10	DO NOT SCALE PRINTS
			SHEET 2 OF 12	
PATENT CLEAR:	DESIGN ACCT. NO.: Z5LCE2	CATEGORY CODE: LH2003	DWG. NO.: 2512266	SIZE: REV.: 1

DWG NO 2512266 SHEET NO 1 OF 2

NAME:ARHARRIS OBJECT:251226_2 DATE:13-Jul-02 20:36:42

INSTRUMENTATION LINES

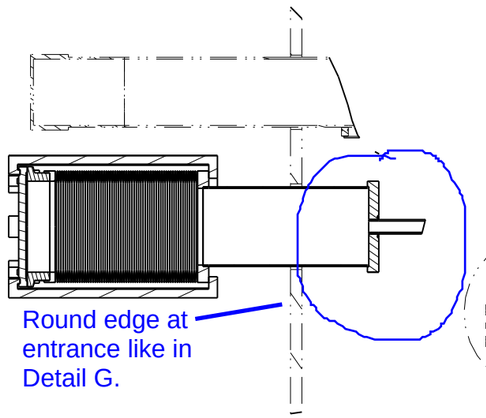

DETAIL F
SCALE 1/2

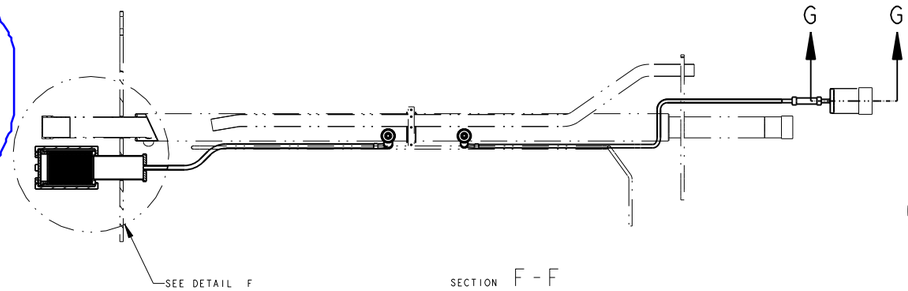

SECTION F - F

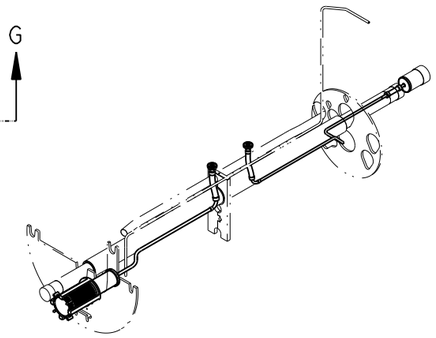

BRAIDED FLEX HOSE, 3/4" ID, 5/8" TUBE - ELBOW & WELD SOCKET
6.1" LIVE LENGTH

INSERT, 5/8" TUBE WELD FLANGE

BRAIDED
FLEX HOSE, 1/2" ID, 5/8 ST. END 1/2" SOCKET ELBOW
6.1" LIVE LENGTH

SCALE 1/10

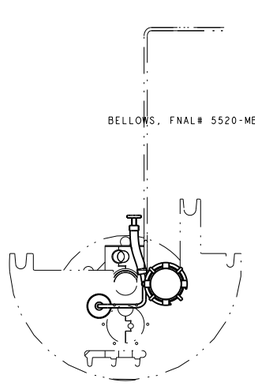

BELLOWS, FNAL# 5520-MB-390073

BRAIDED FLEX HOSE, 1/2" ID X 3" LIVE LENGTH, 1/2 TUBE ENDS

BELLOWS FLANGE, ROLLED
251644

SEE DETAIL G

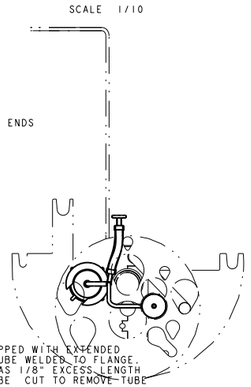

PIPE SHIPPED WITH EXTENDED CAPPED TUBE WELDED TO FLANGE. FLANGE HAS 1/8" EXCESS LENGTH AND CAN BE CUT TO REMOVE TUBE ON SITE DURING FINAL INSTALLATION OF THE FEEDBOX

F
F

.625 [15.88] TUBE X
.063 [1.6] WALL

.500 [12.7] TUBE X
.049 [1.24] WALL

(6.299)
[160]
DISTANCE FROM
DFBX-03 FLANGE TO
INTERCONNECT ~~POINT~~
PLANE

(14.449)
[367]
DISTANCE FROM
DFBX-DI FLANGE TO
INTERCONNECT ~~POINT~~
PLANE

PIPE SUPPORTS

SECTION G - G
SCALE 3/20

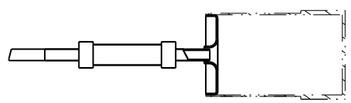

DETAIL G
SCALE 1/2

ERNEST ORLANDO LAWRENCE BERKELEY NATIONAL LABORATORY
UNIVERSITY OF CALIFORNIA - BERKELEY

LHC IR FEEDBOX
CRYOGENICS
PIPING ASSEMBLY DFBXG

MICROFILMED:	DWG. TYPE: ASSEM	SHOW-IN: 24C352	SCALE: 1/10	DO NOT SCALE PRINTS
PATENT CLEAR:	DESIGN ACCT. NO.: Z5LCE2	CATEGORY CODE: LH2003	DWG. NO.: 2512266	SIZE: D REV.: 1

SHEET 3 OF 12

DWG. NO. 2512266 SHEET 3 OF 13

NAME:ARHARRIS OBJECT:251226_3 DATE:13-Jul-02 20:37:56

LD LINES

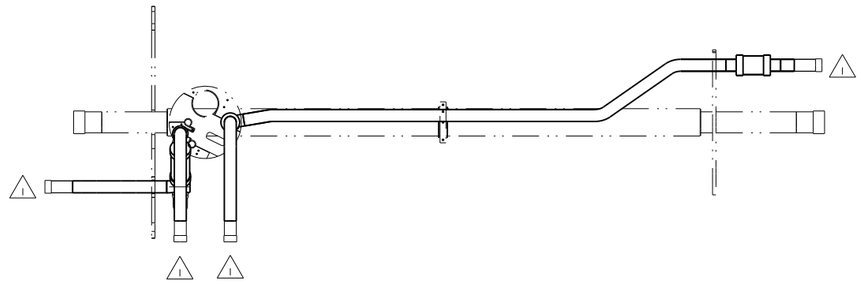

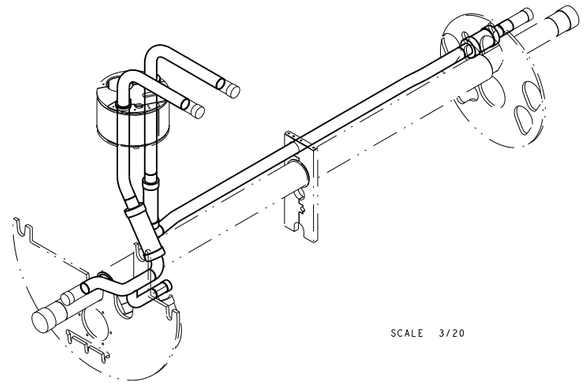

SCALE 3/20

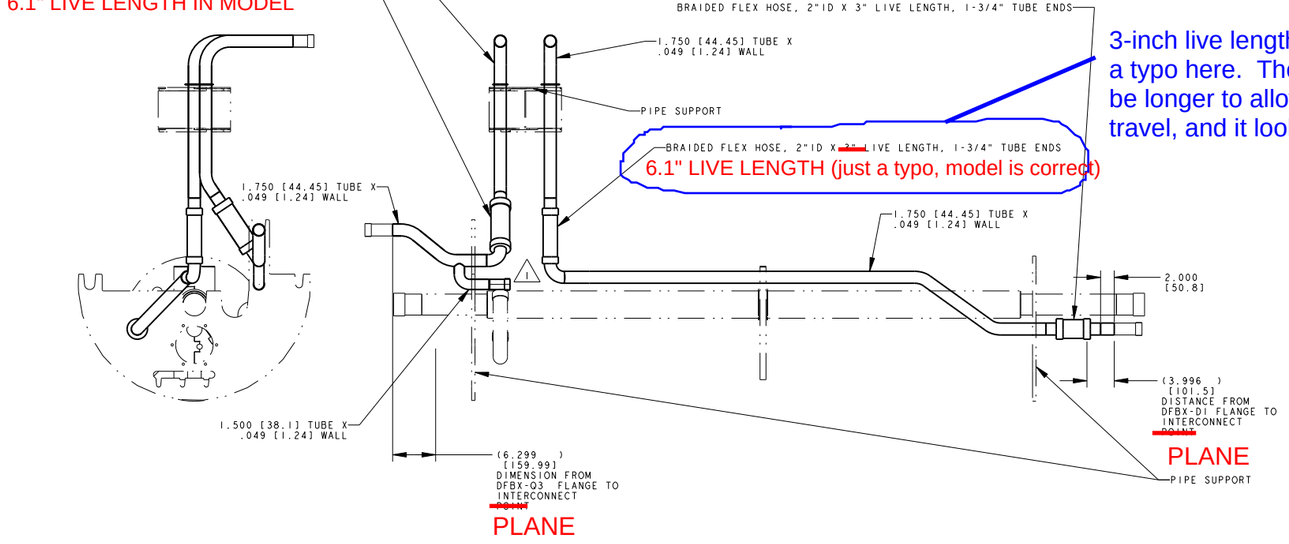

SCALE 3/20

ERNEST ORLANDO LAWRENCE BERKELEY NATIONAL LABORATORY UNIVERSITY OF CALIFORNIA - BERKELEY	
LHC IR FEEDBOX CRYOGENICS PIPING ASSEMBLY DFBXG .	
MICROFILMED:	DWG. TYPE: ASSEM; SIGNS ON: 24C352; SCALE: 1/10; DO NOT SCALE PRINTS
PATENT CLEAR:	DESIGN ACCT. NO.: 25LCE2; CATEGORY CODE: LN2003; SHEET 4 OF 12; DWG. NO.: 2512266; SIZE: B; REV.: 1

DWG. NO. 2512266 DISTRIBUTION 11 4

NAME:ARHARRIS OBJECT:251226_4 DATE:13-Jul-02 20:38:30

NAME:ARHARRIS OBJECT:251226_5 DATE:13-Jul-02 20:38:33

CC LINES

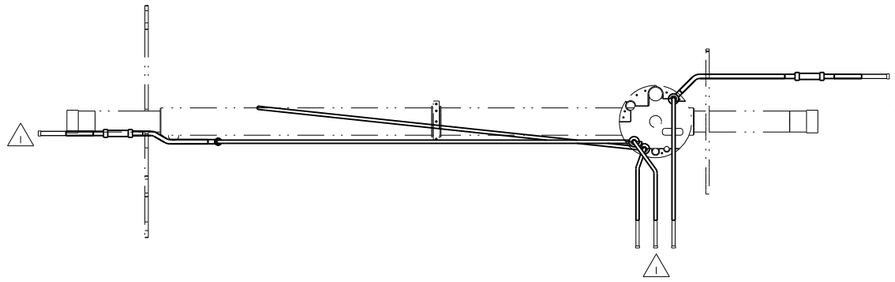

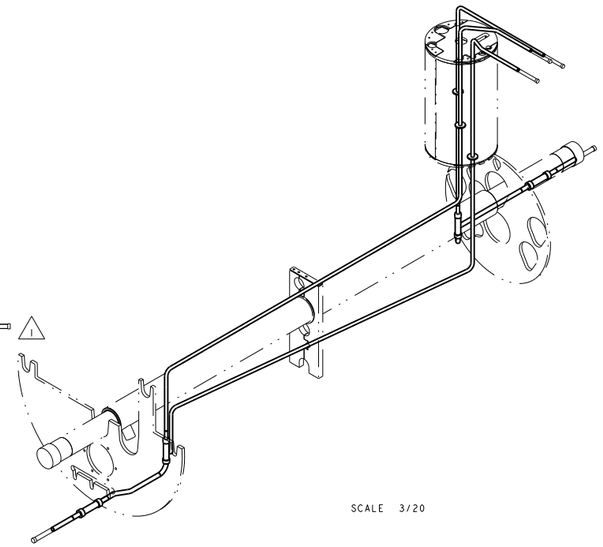

SCALE 3/20

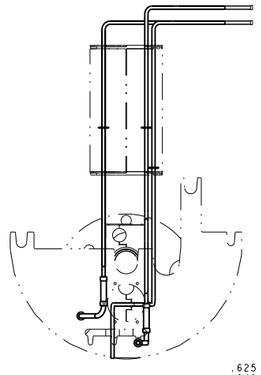

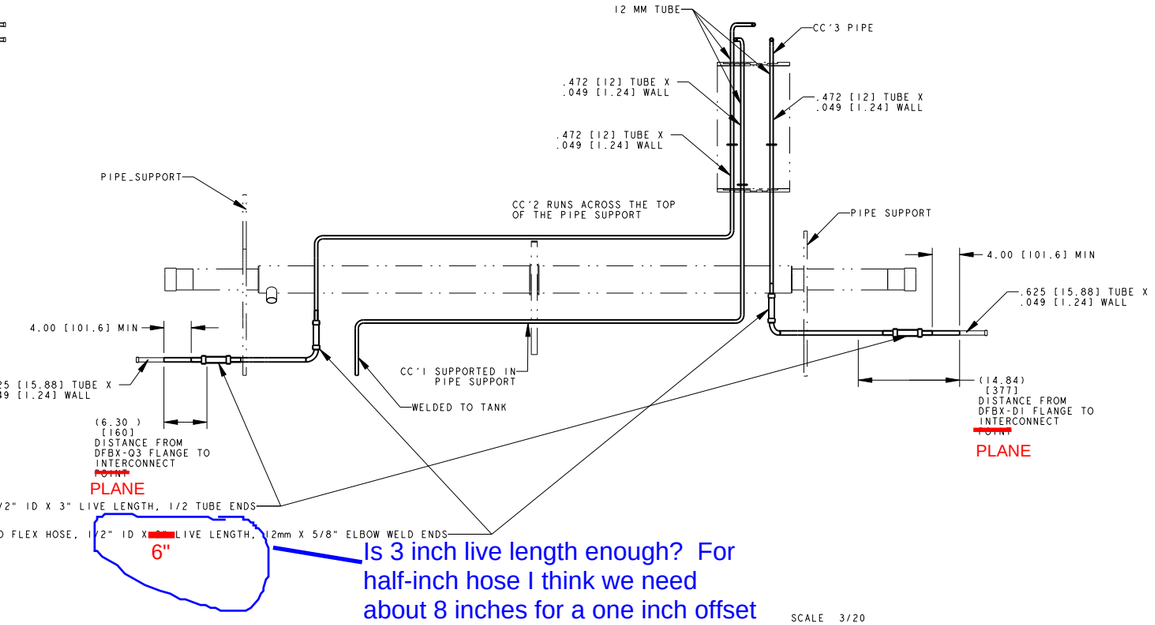

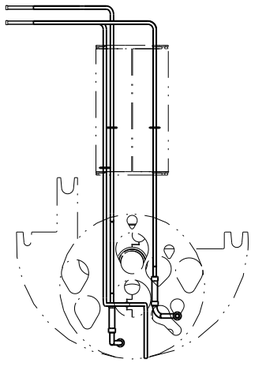

SCALE 3/20

ERNEST ORLANDO LAWRENCE BERKELEY NATIONAL LABORATORY
UNIVERSITY OF CALIFORNIA · BERKELEY

LHC IR FEEDBOX
CRYOGENICS
PIPING ASSEMBLY DFBXG

MICROFILMED:	DWG. TYPE: ASSEM	DRAWN ON: 24C352	SCALE: 1/10	DO NOT SCALE PRINTS
PATENT CLEAR:	DESIGN ACCT. NO.: Z5LCE2	CATEGORY CODE: LH2003	DWG. NO.: 2512266	SHEET 5 OF 12 SIZE: D REV.: 1

DWG NO 2512266 SHEET NO 5 OF 12

E1 & E2 LINES

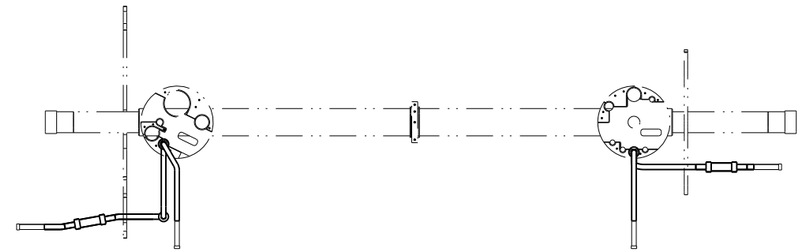

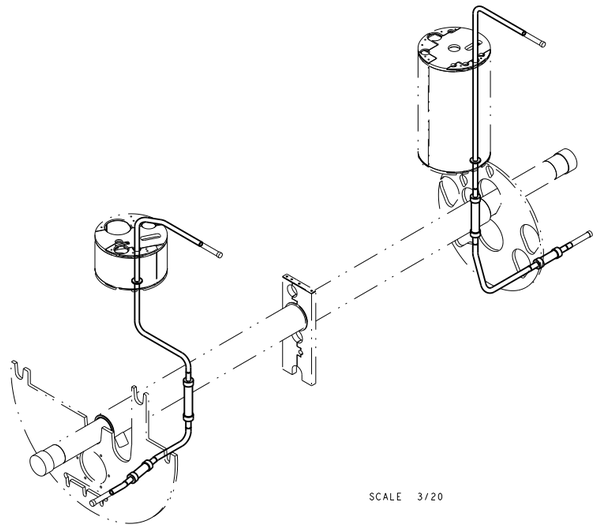

SCALE 3/20

FLEX 3/4" ID X 3" LIVE LENGTH

BRAIDED HOSE, [redacted]

3/4" ID X 5.4" LIVE

BRAIDED FLEX HOSE, [redacted]

Dulie - this is an odd length but its what I measured in the model. with a static bend radius this gives us around 2" of travel.

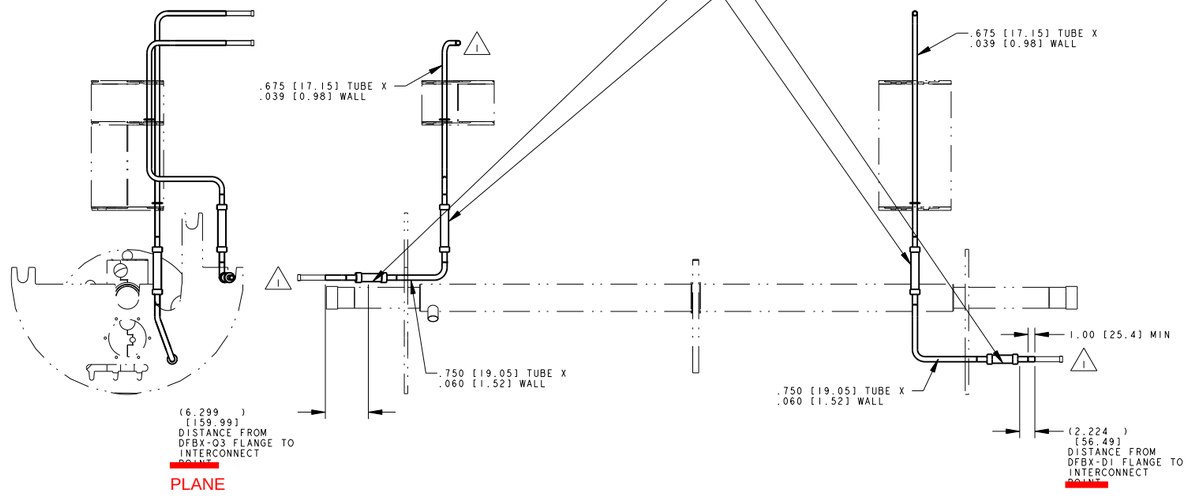

PLANE

PLANE

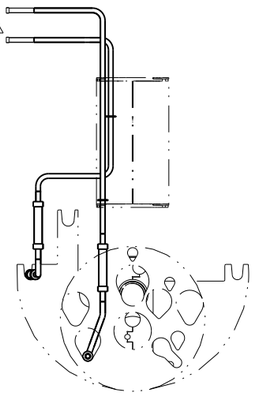

SCALE 3/20

ERNEST ORLANDO LAWRENCE BERKELEY NATIONAL LABORATORY
UNIVERSITY OF CALIFORNIA · BERKELEY

LHC IR FEEDBOX
CRYOGENICS
PIPING ASSEMBLY DFBXG .

MICROFILMED:	DWG. TYPE	SHOWN ON	SCALE: 1/10	DO NOT SCALE PRINT
	ASSEM	24C352	SHEET 6 OF 12	
PATENT CLEAR:	DESIGN ACCT. NO.	CATEGORY CODE	DWG. NO. 2512266	SIZE / REV. 1
	25LCE2	LH2003		

DWG. NO. 2512266 | SHEET 6 | OF 12

NAME:ARHARRIS OBJECT:251226_6 DATE:13-Jul-02 20:38:37

EX LINE

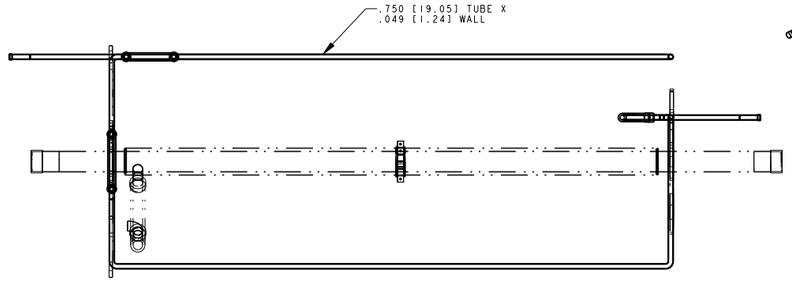

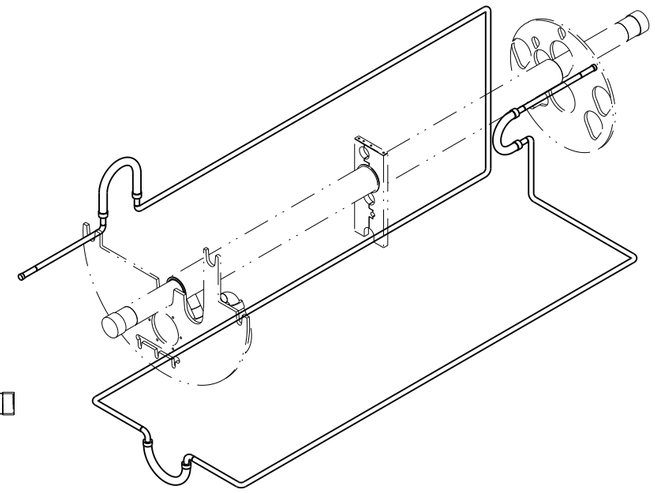

SCALE 3/20

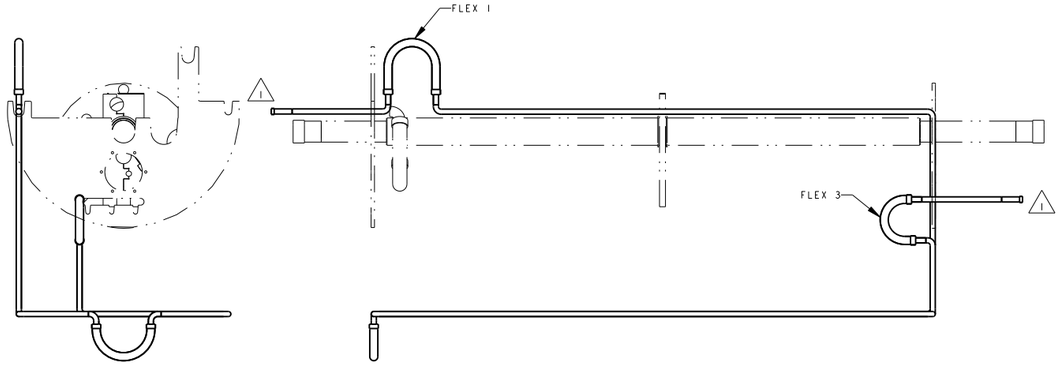

SCALE 3/20

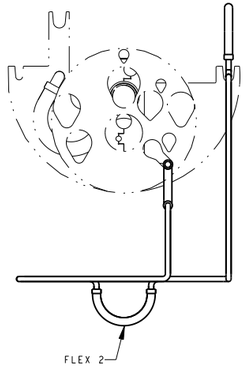

ERNEST ORLANDO LAWRENCE
BERKELEY NATIONAL LABORATORY
UNIVERSITY OF CALIFORNIA - BERKELEY

LHC IR FEEDBOX
CRYOGENICS
PIPING ASSEMBLY DFBXG

MICROFILMED:	DWG. TYPE	SHOW ON	SCALE: 1/10	DO NOT SCALE PRINTS
	ASSEM	24C352	SHEET 7 OF 12	
PATENT CLEAR:	DESIGN ACCT. NO.	CATEGORY CODE	DWG. NO.	SIZE / REV.
	Z5LCE2	LH2003	2512266	1

DWG NO 2512266 SHEET NO 7 OF 12

NAME:ARHARRIS OBJECT:251226_7 DATE:13-Jul-02 20:38:40

XB & CY LINES

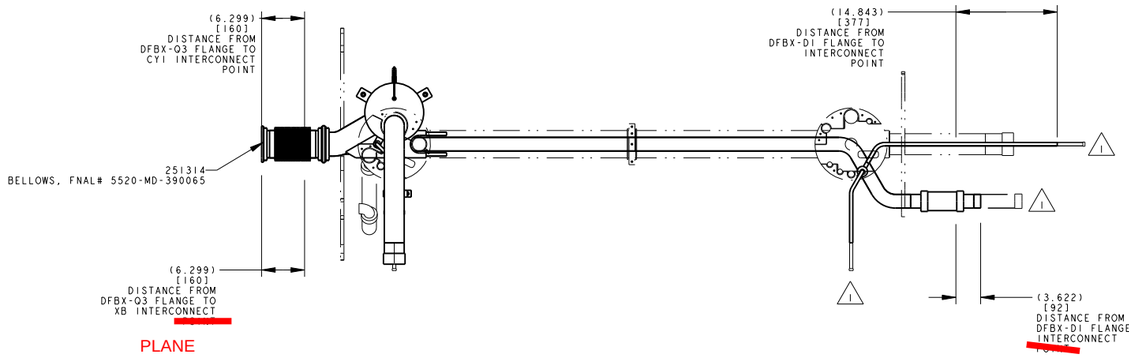

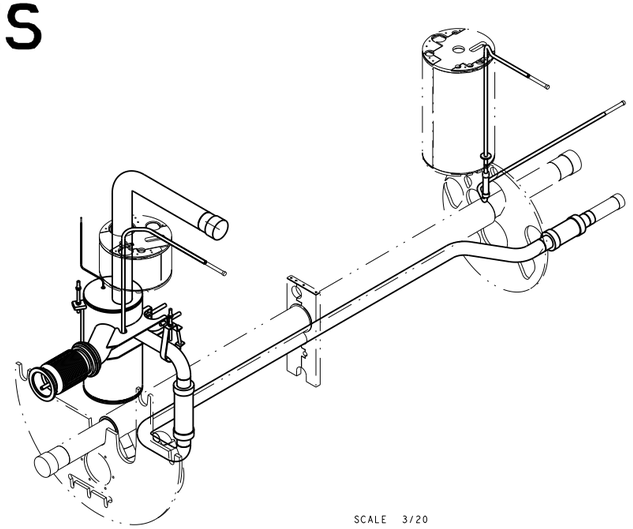

SCALE 3/20

Change this flex hose to LL of 4". Looks like there's room to add an inch of hose below the support.

4"

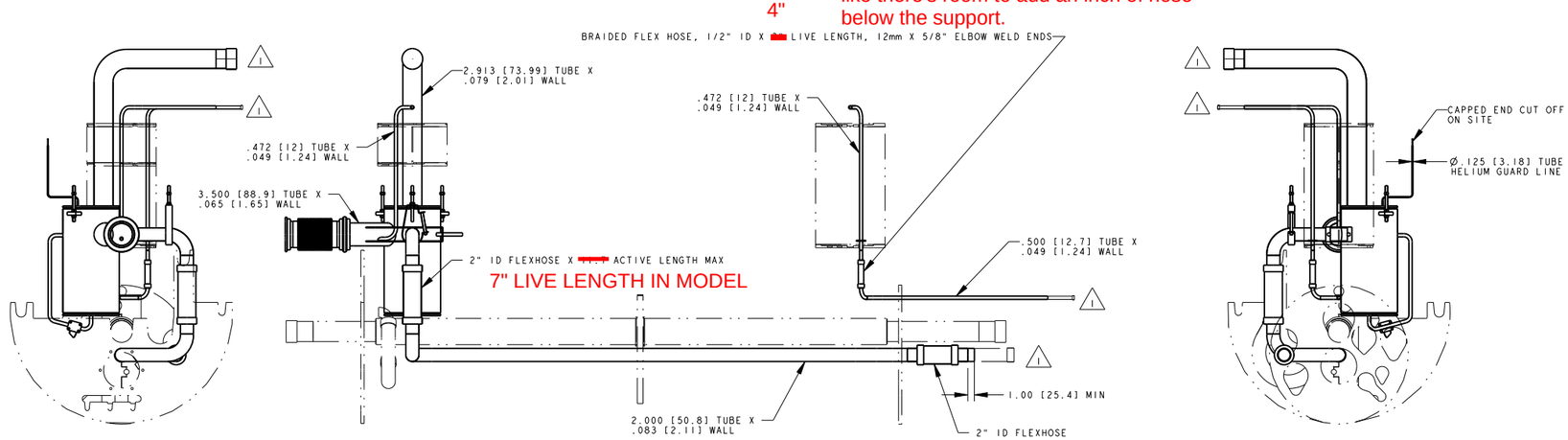

SCALE 3/20

ERNEST ORLANDO LAWRENCE
BERKELEY NATIONAL LABORATORY
UNIVERSITY OF CALIFORNIA · BERKELEY

LHC IR FEEDBOX
CRYOGENICS
PIPING ASSEMBLY DFBXG .

MICROFILMED:	DWG. TYPE	SHOWN ON	SCALE: 1/10	DO NOT SCALE PRINT
	ASSEM	24C352	SHEET 8 OF 12	
PATENT CLEAR:	DETAIL ACCT. NO.	CATEGORY CODE	DWG. NO.	SIZE / REV.
	25LCE2	LH2003	2512266	1

DWG. NO. 2512266 | 1 | 8

NAME:ARHARRIS OBJECT:2512266_8 DATE:13-Jul-02 20:38:43

BEAM TUBE

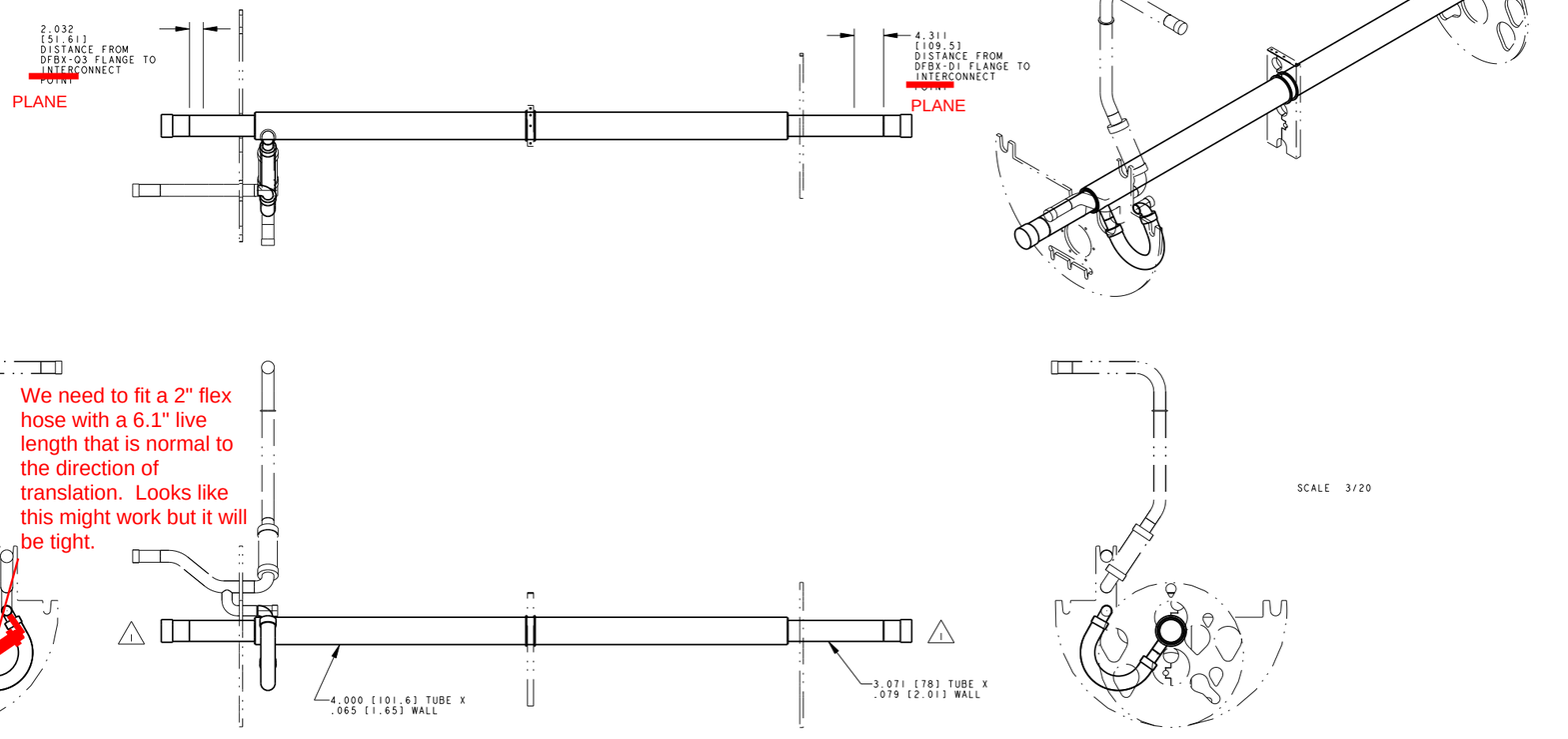

SCALE 3/20

SCALE 3/20

I took a piece of 1.25 inch braided hose, pulled it into this shape, and it really strongly tends to twist when pulled out of the plane of bend. So this has to be fixed. Can we connect to the beam tube inward, axially and put a loop in the plane of bending?

ERNEST ORLANDO LAWRENCE
BERKELEY NATIONAL LABORATORY
UNIVERSITY OF CALIFORNIA - BERKELEY

LHC IR FEEDBOX
CRYOGENICS
PIPING ASSEMBLY DFBXG

MICROFILMED:	DWG. TYPE: ASSEM	DRAWN ON: 24C352	SCALE: 1/10	DO NOT SCALE PRINTS
			SHEET 9 OF 12	
PATENT CLEAR:	DESIGN ACCT. NO.: Z5LCE2	CATEGORY CODE: LH2003	DWG. NO.: 2512266	SIZE: D REV.: 1

DWG NO 2512266 SHEET NO 9 | 11

NAME:ARHARRIS OBJECT:251226_9 DATE:13-Jul-02 20:39:01

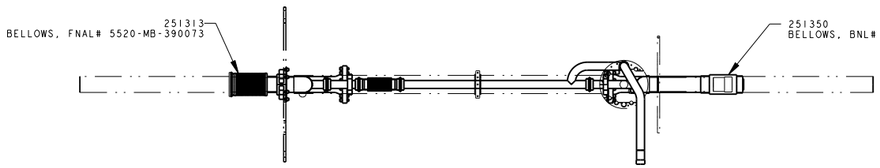

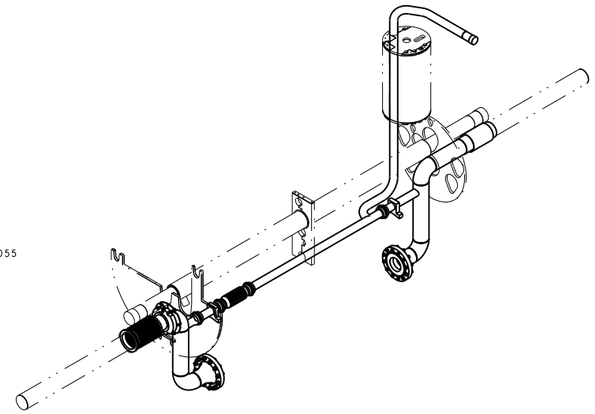

SCALE 1/10

ADD: BRAIDED FLEX HOSE, 2" ID X 6.1 LL, 1-3/4 TUBE ENDS

Perhaps we should add a braided hose here in order to allow a tight support in the pair of QRL spiders. Relative thermal contraction is small, but there is some lateral motion as the helium vessel shrinks to its lower, fixed supports.

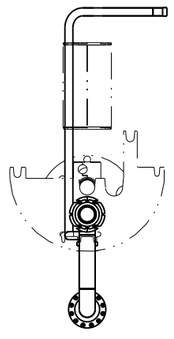

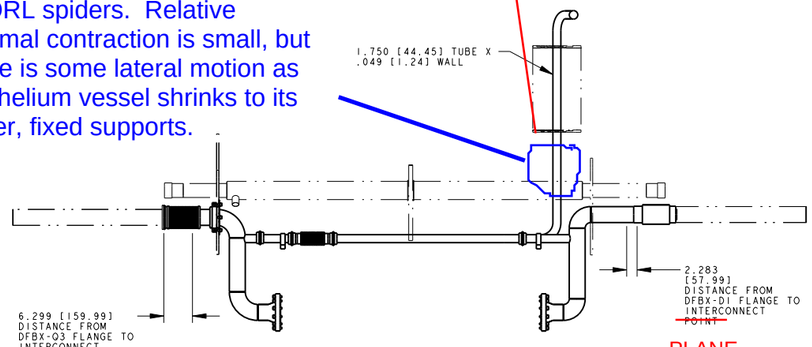

SCALE 1/10

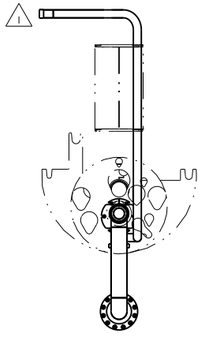

ERNEST ORLANDO LAWRENCE BERKELEY NATIONAL LABORATORY
UNIVERSITY OF CALIFORNIA - BERKELEY

LHC IR FEEDBOX
CRYOGENICS
PIPING ASSEMBLY DFBXG

MICROFILMED:	DWG. TYPE: ASSEM	DRAWN ON: 24C352	SCALE: 1/10	DO NOT SCALE PRINTS
PATENT CLEAR:	DESIGN ACCT. NO.: Z5LCE2	CATEGORY CODE: LH2003	DWG. NO.: 2512266	SIZE: 1 REV.

SHEET 10 OF 12

DWG NO 2512266 SHEET NO 10

NAME:ARHARRIS OBJECT:251226_10 DATE:13-Jul-02 20:39:04

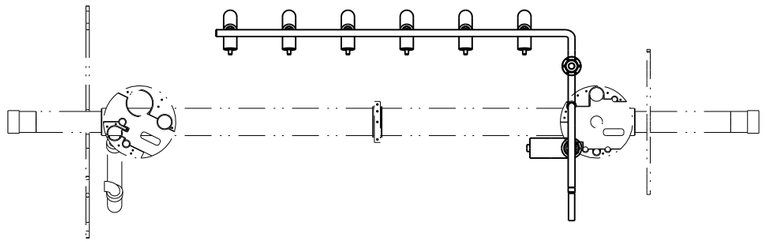

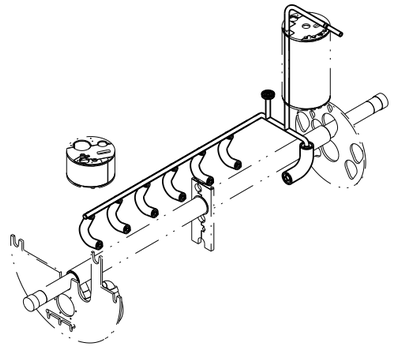

SCALE 1/10

THIS SHEET IN PROGRESS I ASSUME

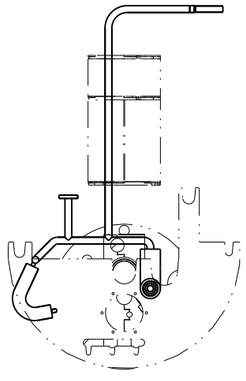

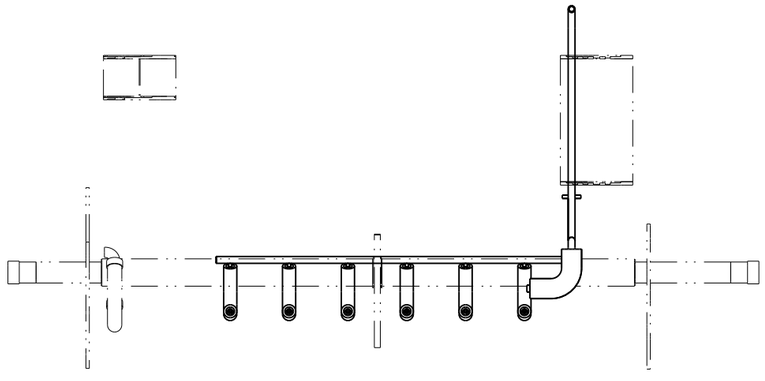

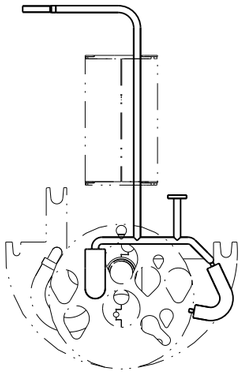

SCALE 3/20

ERNEST ORLANDO LAWRENCE
BERKELEY NATIONAL LABORATORY
UNIVERSITY OF CALIFORNIA - BERKELEY

LHC IR FEEDBOX
CRYOGENICS
PIPING ASSEMBLY DFBXG

MICROFILMED:	DWG. TYPE: ASSEM	SHOW ON: 24C352	SCALE: 1/10	DO NOT SCALE PRINTS
PATENT CLEAR:	DESIGN ACCT. NO.: Z5LCE2	CATEGORY CODE: LH2003	DWG. NO.: 2512266	SIZE: D / REV.: 1

SHEET 11 OF 12

DWG NO 2512266 SHEET NO 11 11

NAME:ARHARRIS OBJECT:251226_11 DATE:13-Jul-02 20:39:39

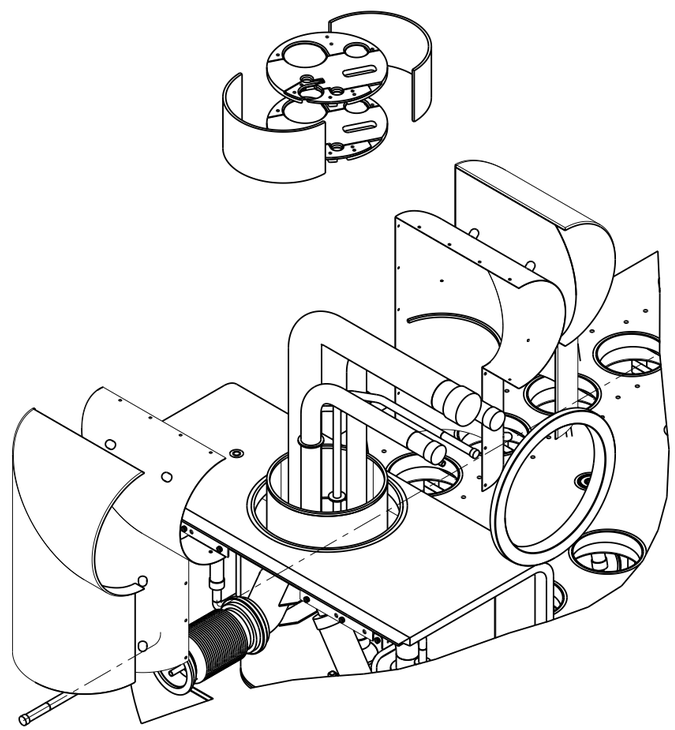

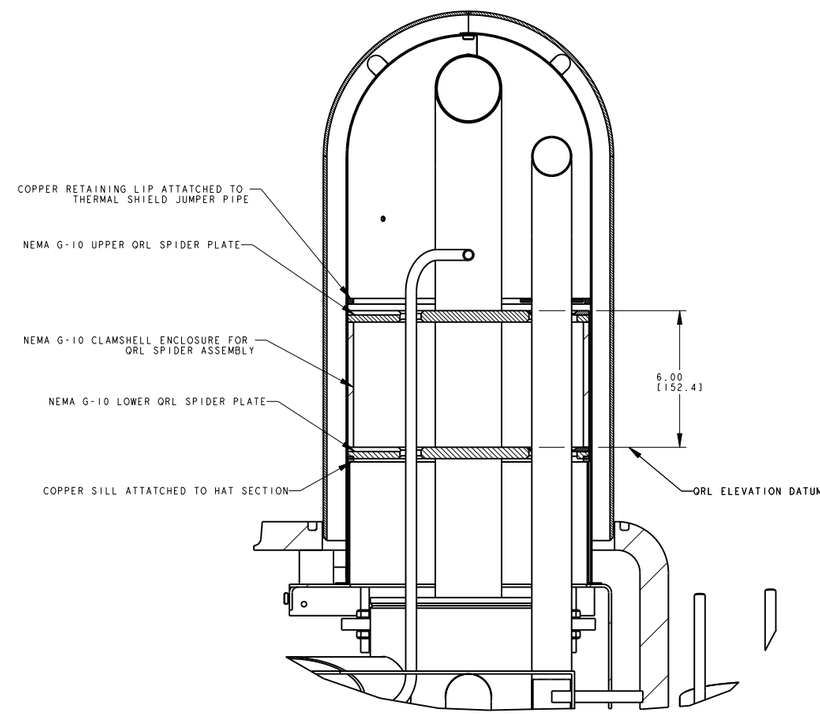

SECTION D - D
SCALE 1/2

ERNEST ORLANDO LAWRENCE BERKELEY NATIONAL LABORATORY
UNIVERSITY OF CALIFORNIA - BERKELEY

LHC IR FEEDBOX
CRYOGENICS
PIPING ASSEMBLY DFBXG .

MICROFILMED:	DWG. TYPE	SHOWN ON	SCALE: 1/10	DO NOT SCALE PRINTS
	ASSEM	24C352	SHEET 12 OF 12	
PATENT CLEAR:	DESIGN ACCT. NO.	CATEGORY CODE	DWG. NO.	SIZE / REV.
	Z5LCE2	LH2003	2512266	1

DWG. NO. 2512266 SHEET 1 OF 12

NAME:ARHARRIS OBJECT:251226_12 DATE:13-Jul-02 20:39:43