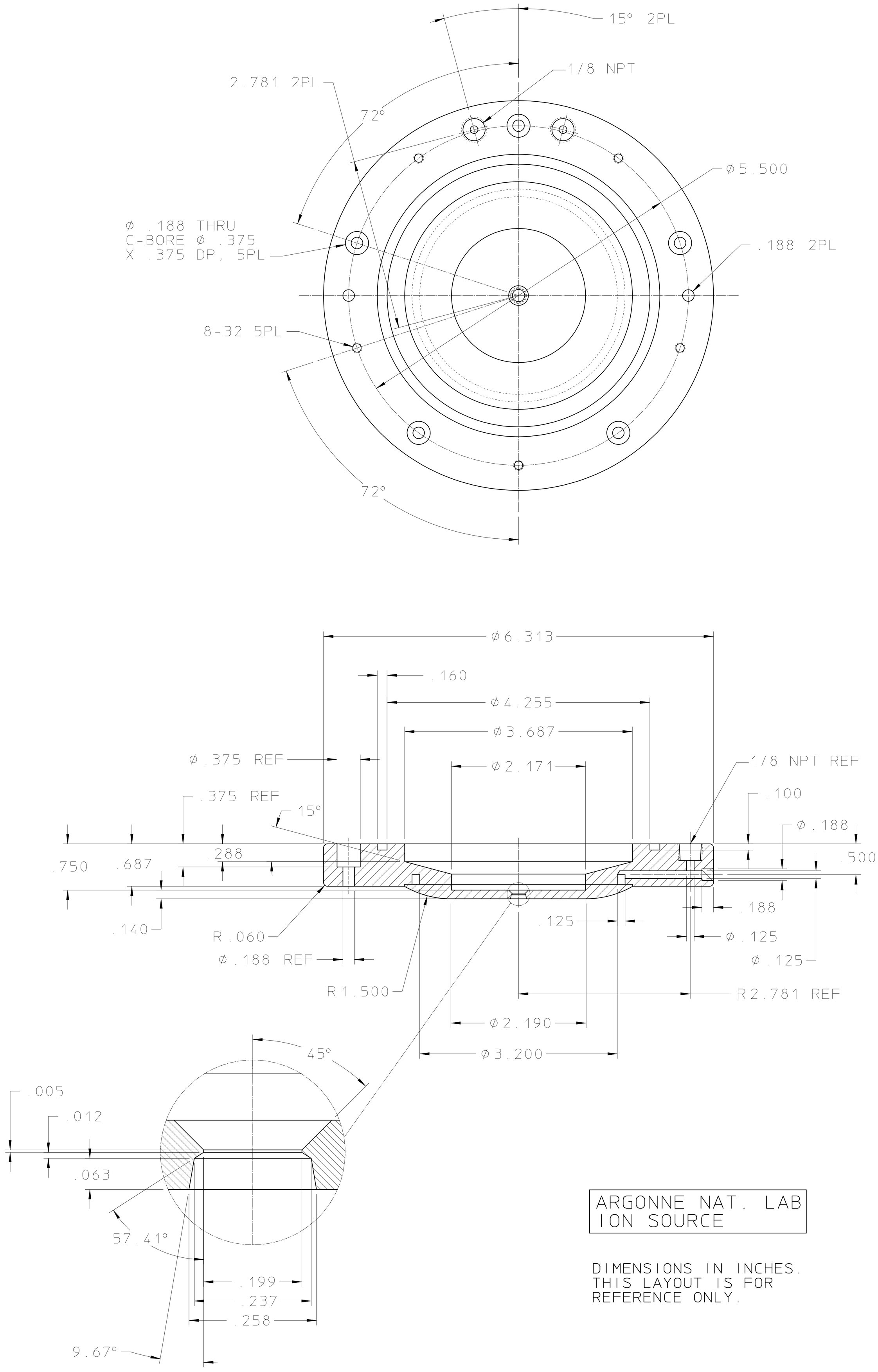

ARGONNE NAT. LAB
ION SOURCE

DIMENSIONS IN INCHES.
THIS LAYOUT IS FOR
REFERENCE ONLY.