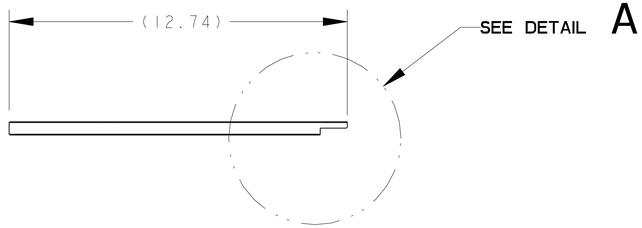

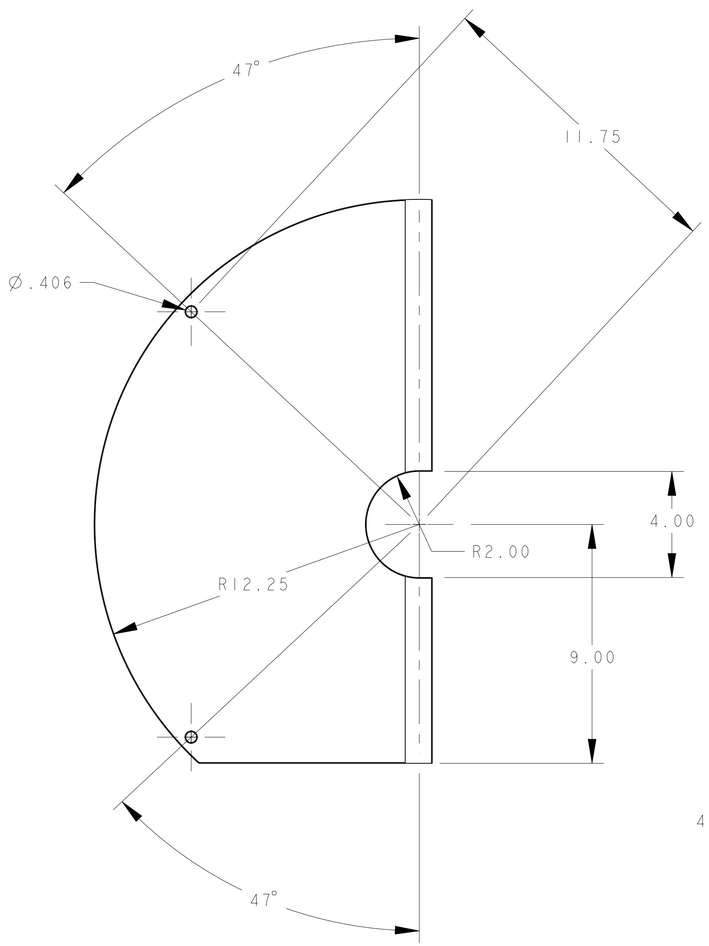

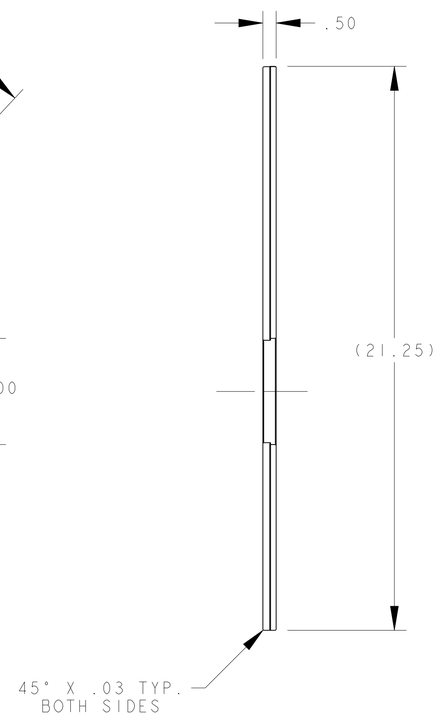

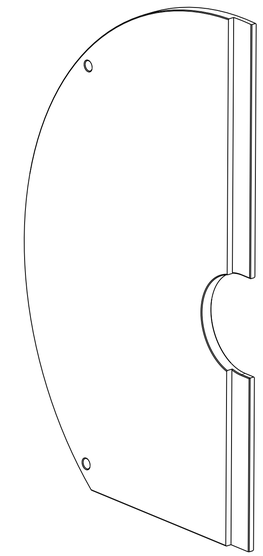

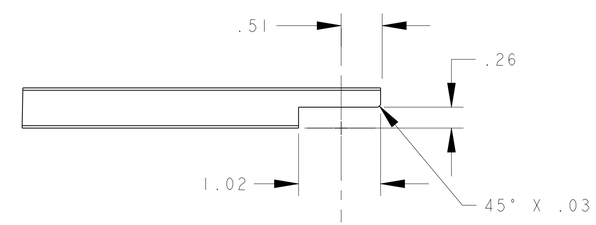

DETAIL A
SCALE 1/1

NOTES:

1. POWDER COAT, SERIES 89, TIGER DRYLAC RAL 5015, MEDIUM TEXTURE FINISH (OR EQUIVALENT)

REV	DWG	CHK	ZONE	DATE	CHANGES
A	AD			02/13/02	INITIAL RELEASE

UNLESS OTHERWISE SPECIFIED
PROJECTION:
TOLERANCES: X.X ± 0.1 | FRAC. ± 1/64; X.XX ± 0.03 | Angles ± 1.0°; X.XXX ± 0.010 | FINISH 125
DO NOT SCALE PRINT
THREADS ARE CLASS 2
CHAMFER ENDS OF ALL SCREW TREADS 30°
CUT ROUND, 1.5 THREAD RELIEF ON MACHINED THREADS
BREAK EDGES .016 MAX. ON MACHINED WORK
REMOVE BURRS, WELD SPLATTER & LOOSE SCALE
IN ACCORDANCE WITH ASME Y14.5M & B46.1

DESCRIPTION	MATERIAL	MAT. LOCATION
-	LEAD	-

SHOP ORDERS
ACCT NO. | NO. REQD | SER NO. -
DEL TO | DATE ISSD - | DATE REQD -
SURFACE TREATMT -
IDENT METHOD TAG
PROJECT NUMBER N/A
PROJECT NAME N/A
DWG BY Allan DeMello | DATE 28-Jan-02
CHK BY D. OSHATZ | DATE
APR BY D. OSHATZ | DATE

ERNEST ORLANDO LAWRENCE BERKELEY NATIONAL LABORATORY
UNIVERSITY OF CALIFORNIA - BERKELEY

SNS - FES MEBT
MECHANICAL SUB-SYSTEMS
REBUNCHER LEAD SHIELD, FULL

MICROFILMED:
PATENT CLEAR:

DWG. TYPE	SHOWN ON	SCALE:	DO NOT SCALE PRINTS
PART	25B603	33/100	
		SHEET 1 OF 1	

DESIGN ACCT. NO.	CATEGORY CODE	DWG. NO.	SIZE	REV.
-	FE3330	25B7874	A	A

Dwg. File: 25B787 Model File: 25B787