NOTE:
1. ULTRA-HIGH VACUUM CLEANING & PACKAGING REQUIRED.

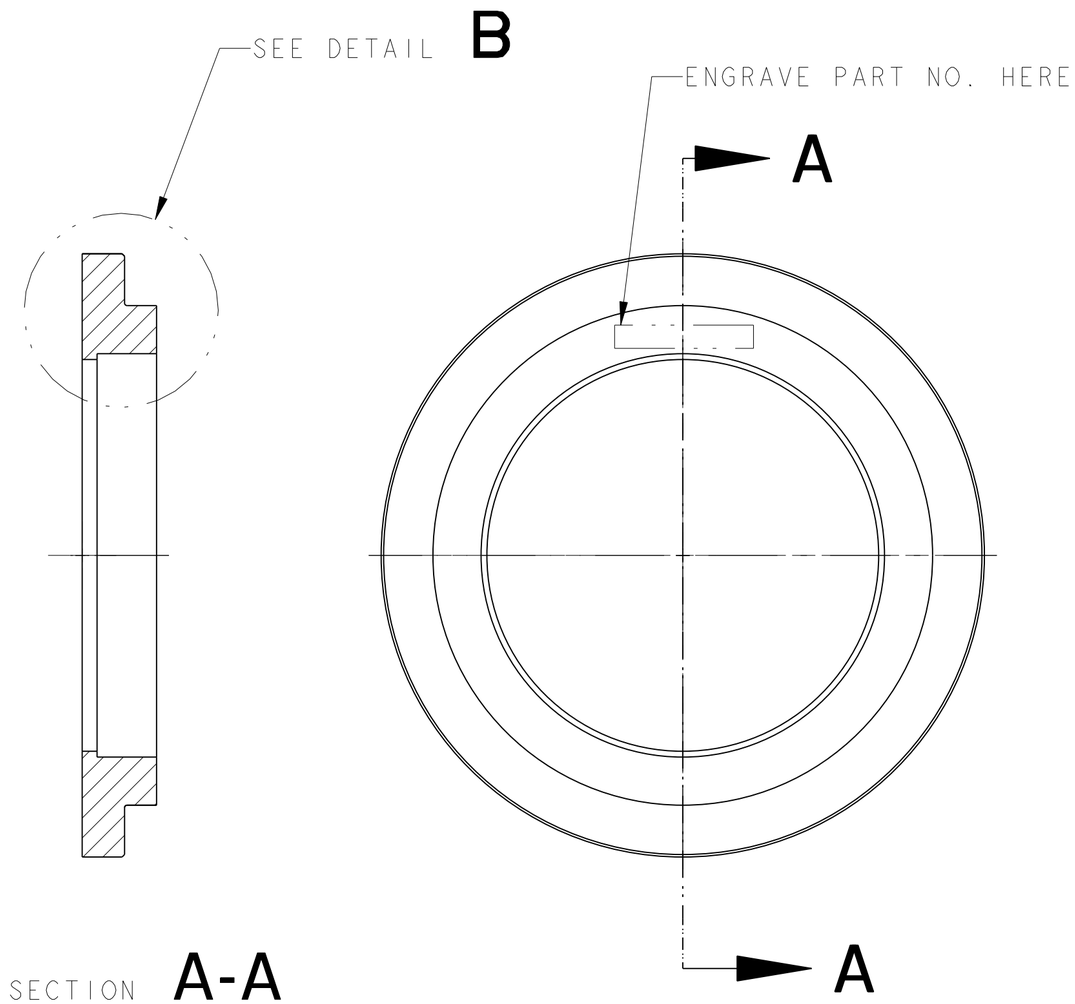

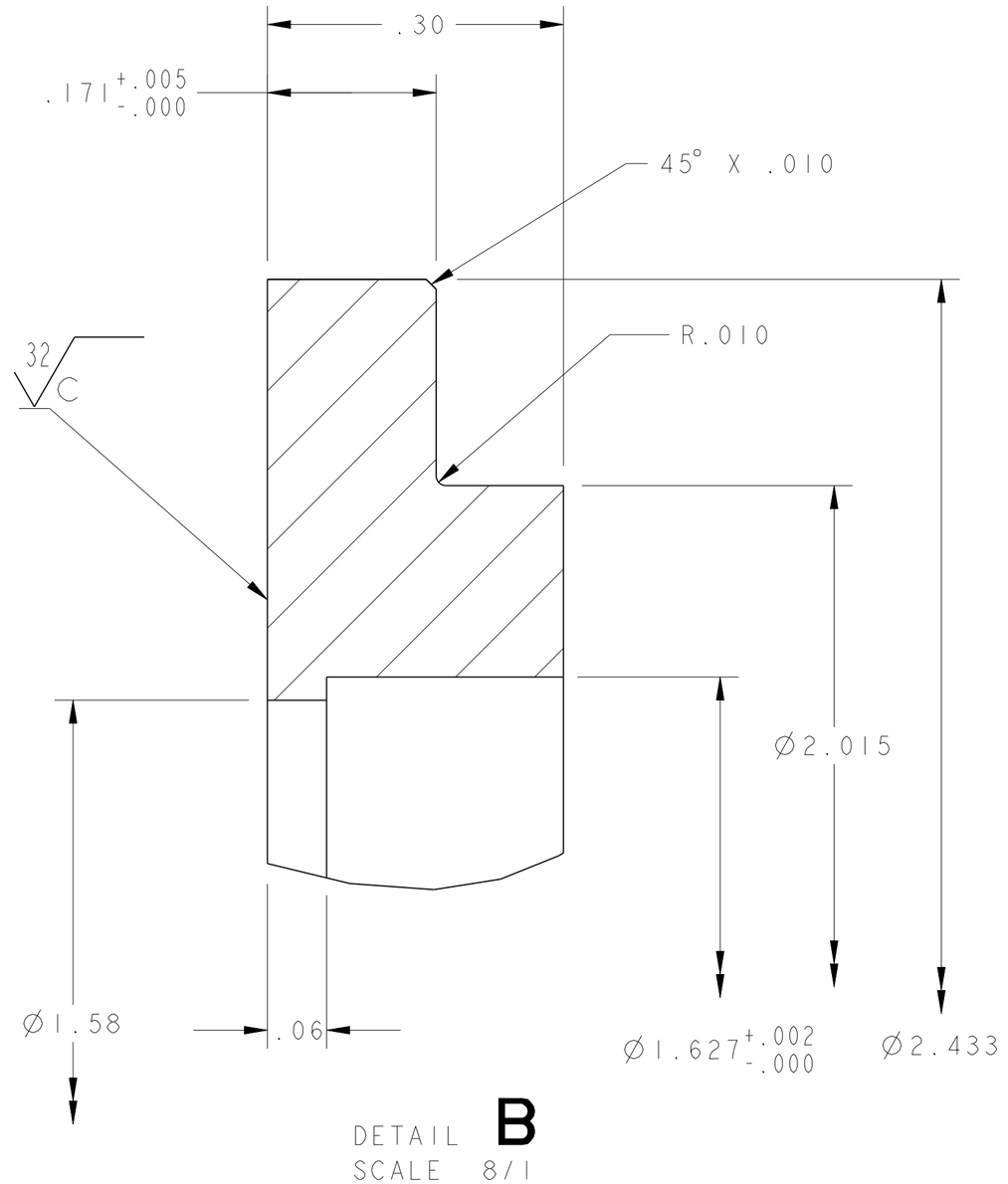

REV	DWG	CHK	ZONE	DATE	CHANGES
A	RLM	PAL		08-03-01	INITIAL RELEASE

UNLESS OTHERWISE SPECIFIED
PROJECTION:

TOLERANCES		
	X.X ± 0.1	FRAC. ± 1/64
	X.XX ± 0.01	Angles ± 1.0°
	X.XXX ± 0.005	FINISH 125

DO NOT SCALE PRINT

THREADS ARE CLASS 2
CHAMFER ENDS OF ALL SCREW TREADS 30°
CUT ROUND, 1.5 THREAD RELIEF ON MACHINED THREADS
BREAK EDGES .016 MAX. ON MACHINED WORK
REMOVE BURRS, WELD SPLATTER & LOOSE SCALE
IN ACCORDANCE WITH ASME Y14.5M & B46.1

DESCRIPTION	MATERIAL	MAT. LOCATION
-	SS 304L	-

SHOP ORDERS

ACCT NO.	NO. REQD	SER NO.	-
DEL TO		DATE ISSD	-
SURFACE TREATMT	-	DATE REQD	-
IDENT METHOD	TAG		
PROJECT NUMBER	na		
PROJECT NAME	N/A		
DWG BY	R LA MANTIA	DATE	08-03-01
CHK BY	PAL	DATE	08-03-01
APR BY	DPO	DATE	08-03-01

ERNEST ORLANDO LAWRENCE BERKELEY NATIONAL LABORATORY
UNIVERSITY OF CALIFORNIA - BERKELEY

SNS-FES MEBT
BEAM PIPES
SEAL RING, BP5, BPM3 SIDE

MICROFILMED:	DWG. TYPE	SHOWN ON	SCALE: 2/1	DO NOT SCALE PRINTS
	PART	25B687	SHEET 1 OF 1	
PATENT CLEAR:	DESIGN ACCT. NO.	CATEGORY CODE	DWG. NO.	SIZE / REV.
	-	FE3312	25B6903	A

Rev. 11/29/2000 J. Dowd

Dwg. File: 25B690 Model File: 25B690

DWG. NO. 25B6903 SIZE A REV. SH. 1