NOTE:
1. ULTRA-HIGH VACUUM CLEANING & PACKAGING REQUIRED.

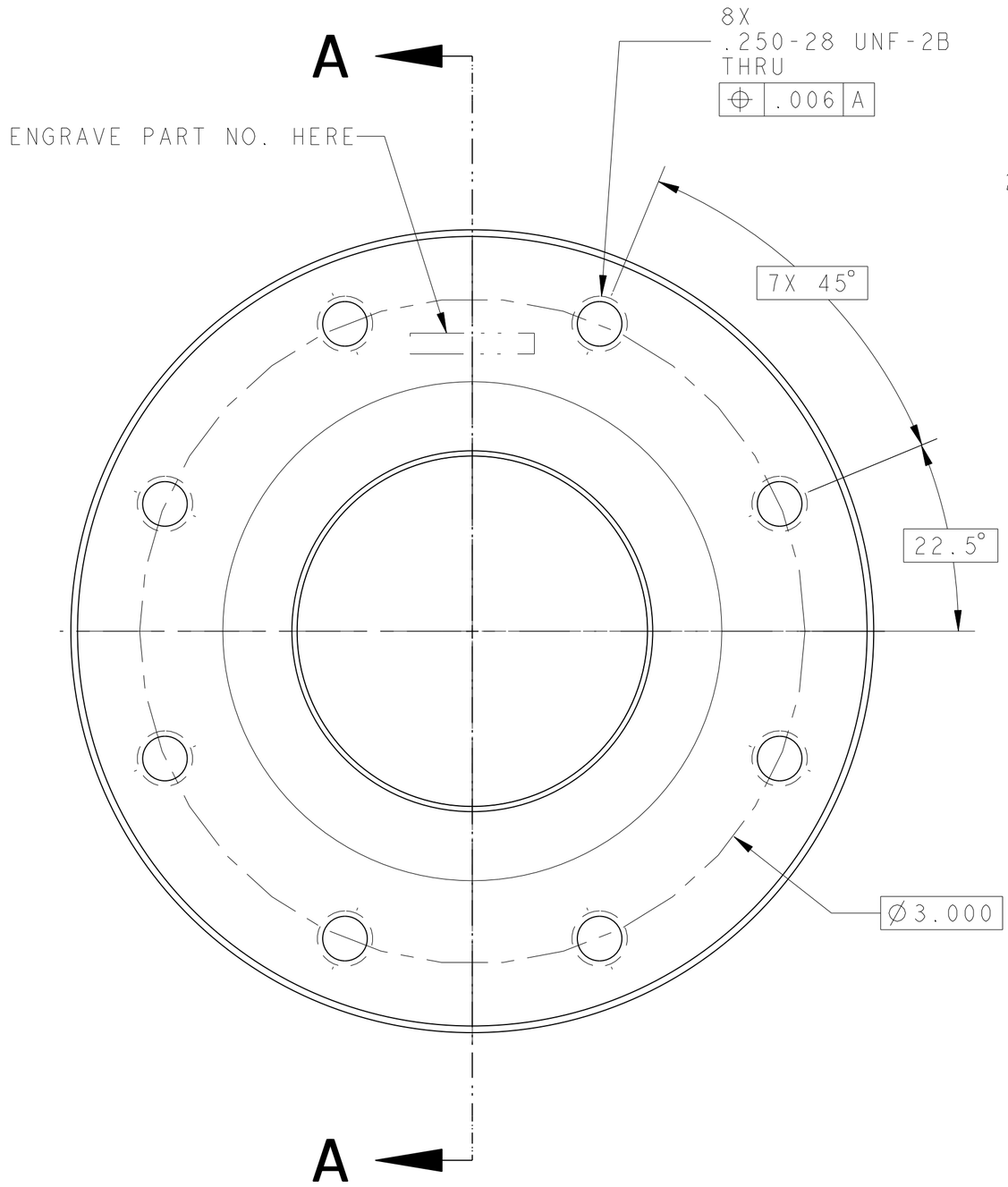

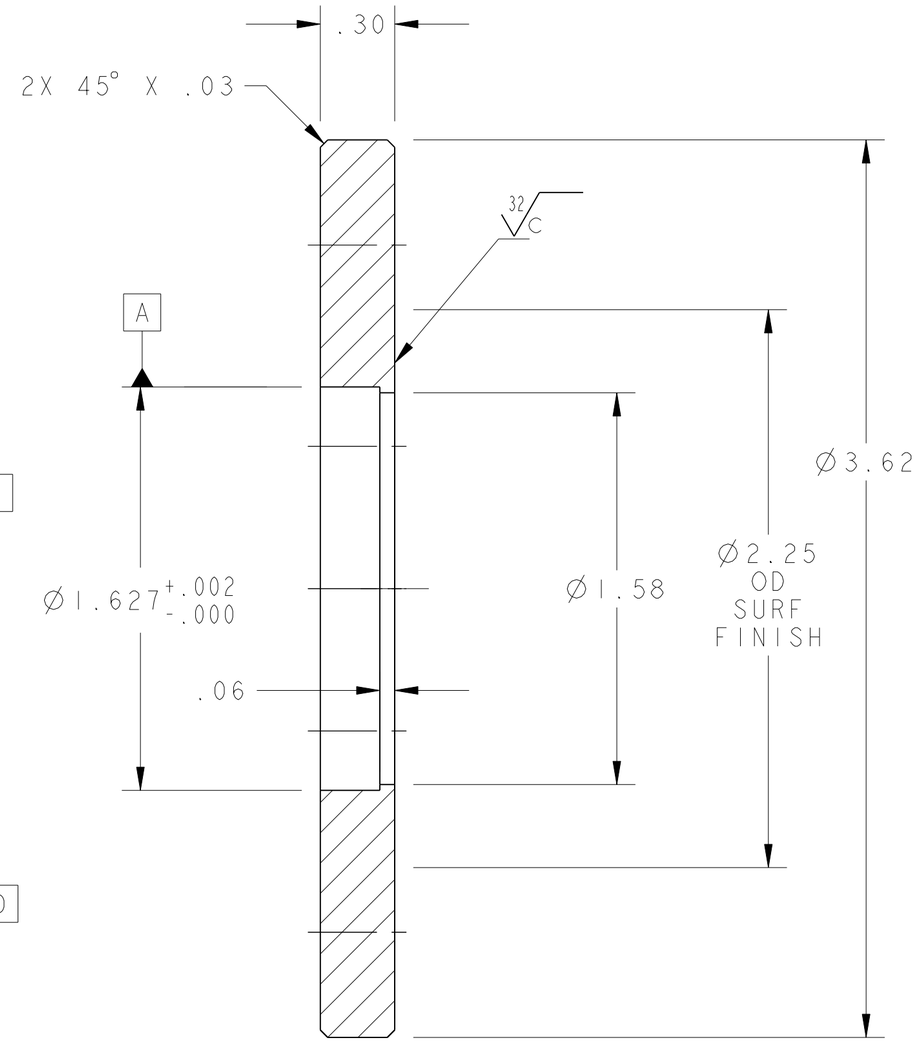

SECTION **A-A**

A	RLM	PAL		08-03-01	INITIAL RELEASE
REV	DWG	CHK	ZONE	DATE	CHANGES

UNLESS OTHERWISE SPECIFIED
PROJECTION:
TOLERANCES: X.X ± 0.1 | FRAC. ± 1/64 | X.XX ± 0.01 | Angles ± 1.0° | X.XXX ± 0.005 | FINISH 125

DO NOT SCALE PRINT

THREADS ARE CLASS 2
CHAMFER ENDS OF ALL SCREW TREADS 30°
CUT ROUND, 1.5 THREAD RELIEF ON MACHINED THREADS
BREAK EDGES .016 MAX. ON MACHINED WORK
REMOVE BURRS, WELD SPLATTER & LOOSE SCALE
IN ACCORDANCE WITH ASME Y14.5M & B46.1

-		SS 304L	-
DESCRIPTION		MATERIAL	MAT. LOCATION

SHOP ORDERS

ACCT NO.	NO. REQD	SER NO.	-
DEL TO		DATE ISSD	-
SURFACE TREATMT	-	DATE REQD	-
IDENT METHOD	TAG		
PROJECT NUMBER	na		
PROJECT NAME	N/A		
DWG BY	R LA MANTIA	DATE	08-03-01
CHK BY	PAL	DATE	08-03-01
APR BY	DPO	DATE	08-03-01

ERNEST ORLANDO LAWRENCE BERKELEY NATIONAL LABORATORY
UNIVERSITY OF CALIFORNIA - BERKELEY

SNS-FES MEBT
BEAM PIPES
FLANGE, BP6, BPM4 SIDE

MICROFILMED:	DWG. TYPE	SHOWN ON	SCALE: 2/1	DO NOT SCALE PRINTS
	PART	25B684	SHEET 1 OF 1	
PATENT CLEAR:	DESIGN ACCT. NO.	CATEGORY CODE	DWG. NO.	SIZE / REV.
	-	FE3312	25B6853	A

Dwg. File: 25B685 Model File: 25B685

DWG. NO. 25B6853 SIZE A REV. SH. 1

Rev. 1/29/2000 - R. Dowers