NOTE:
1. ULTRA-HIGH VACUUM CLEANING & PACKAGING REQUIRED.
2. FURNISH AS A SET

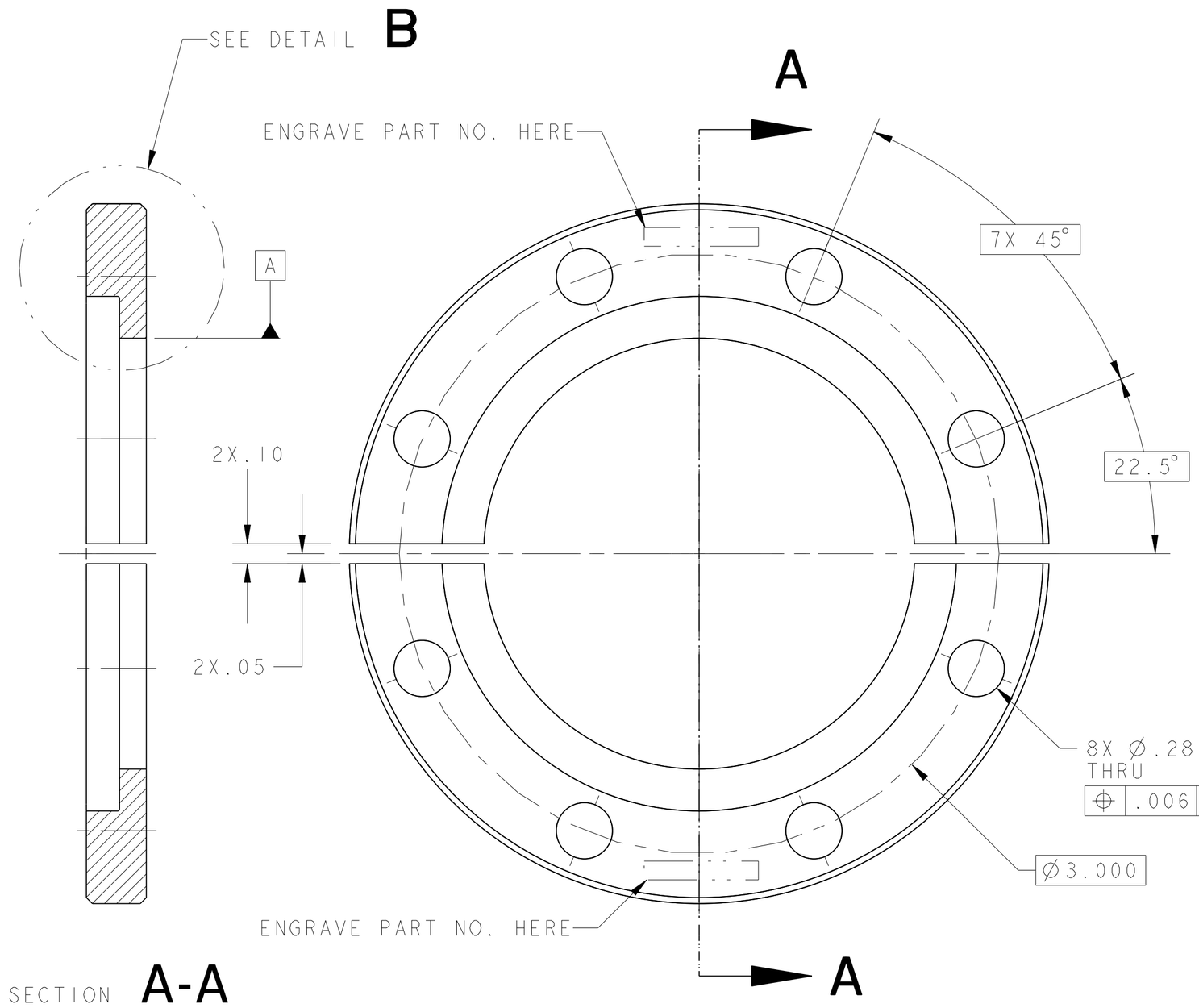

SECTION A-A

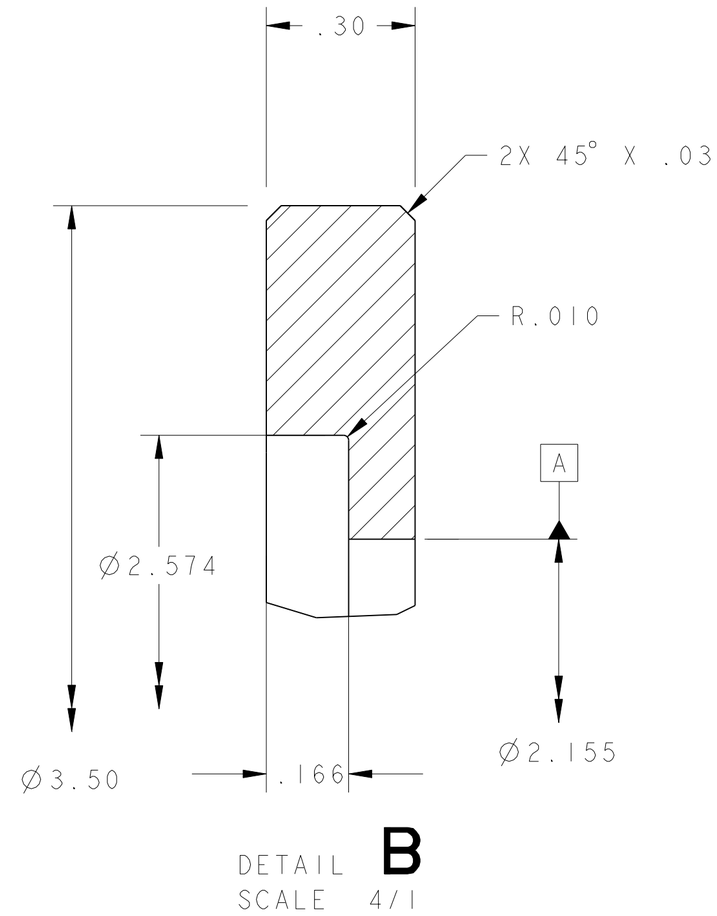

DETAIL B
SCALE 4/1

B	RLM	PAL	B3	09-27-01	OD WAS 3.62, NOW 3.50
A	RLM	PAL		08-03-01	INITIAL RELEASE
REV	DWG	CHK	ZONE	DATE	CHANGES

UNLESS OTHERWISE SPECIFIED
PROJECTION:

TOLERANCES		
	X.X ± 0.1	FRAC. ± 1/64
	X.XX ± 0.01	Angles ± 1.0°
	X.XXX ± 0.005	FINISH 125

DO NOT SCALE PRINT
THREADS ARE CLASS 2
CHAMFER ENDS OF ALL SCREW TREADS 30°
CUT ROUND, 1.5 THREAD RELIEF ON MACHINED THREADS
BREAK EDGES .016 MAX. ON MACHINED WORK
REMOVE BURRS, WELD SPLATTER & LOOSE SCALE
IN ACCORDANCE WITH ASME Y14.5M & B46.1

DESCRIPTION	MATERIAL	MAT. LOCATION
-	SS 304L	-

SHOP ORDERS

ACCT NO.	NO. REQD	SER NO.	-
DEL TO		DATE ISSD	-
		DATE REQD	-
SURFACE TREATMT	-		
IDENT METHOD	TAG		
PROJECT NUMBER	na		
PROJECT NAME	N/A		
DWG BY	R LA MANTIA	DATE	08-03-01
CHK BY	PAL	DATE	08-03-01
APR BY	DPO	DATE	08-03-01

ERNEST ORLANDO LAWRENCE
BERKELEY NATIONAL LABORATORY
UNIVERSITY OF CALIFORNIA - BERKELEY

SNS-FES MEBT
BEAM PIPES
SPLIT FLANGE, BP7, RB3 SIDE

MICROFILMED:	DWG. TYPE	SHOWN ON	SCALE: 2/1	DO NOT SCALE PRINTS
	PART	25B680	SHEET 1 OF 1	
PATENT CLEAR:	DESIGN ACCT. NO.	CATEGORY CODE	DWG. NO.	SIZE / REV.
	-	FE3312	25B6833	B

Dwg. File: 25B683 Model File: 25B683
Rev. 1/29/2000 - R. Owens

DWG. NO. 25B6833 SIZE B REV. 1 SH.