NOTE:
1. ASSEMBLE IN CLEAN ENVIRONMENT. AFTER ASSEMBLY, WRAP TO MAINTAIN CLEANLINESS.
2. FINISHED PART TO BE VACUUM TIGHT. LEAK RATE NOT TO EXCEED 1X10E-8 torr l/sec.He.
3. DIMENSIONS IN INCHES.
4. SILVER PLATE ALL SCREWS.

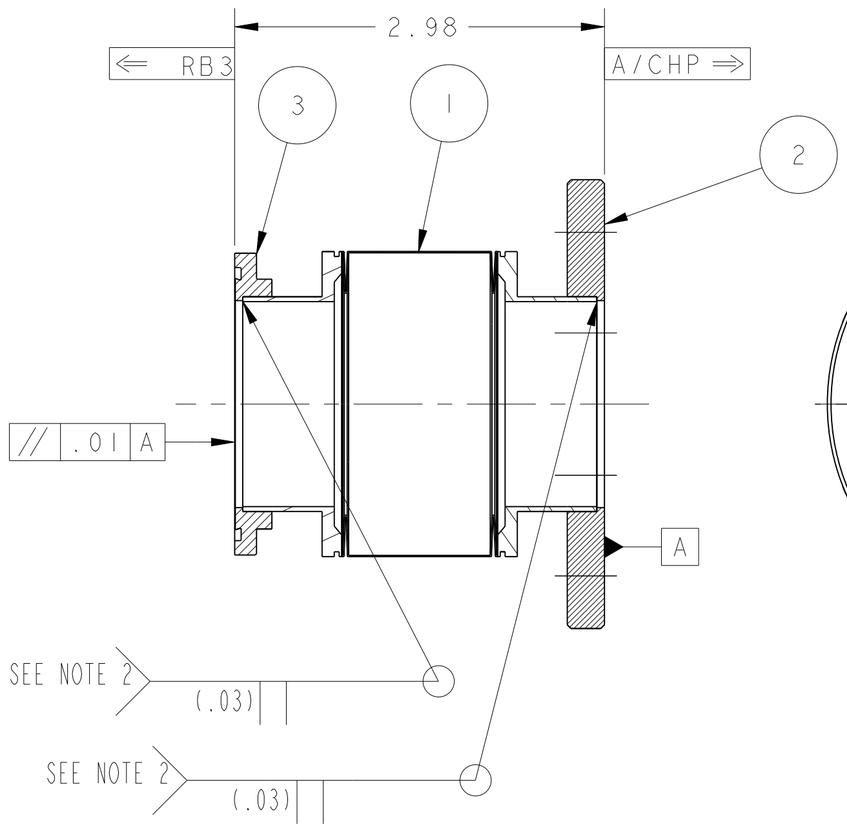

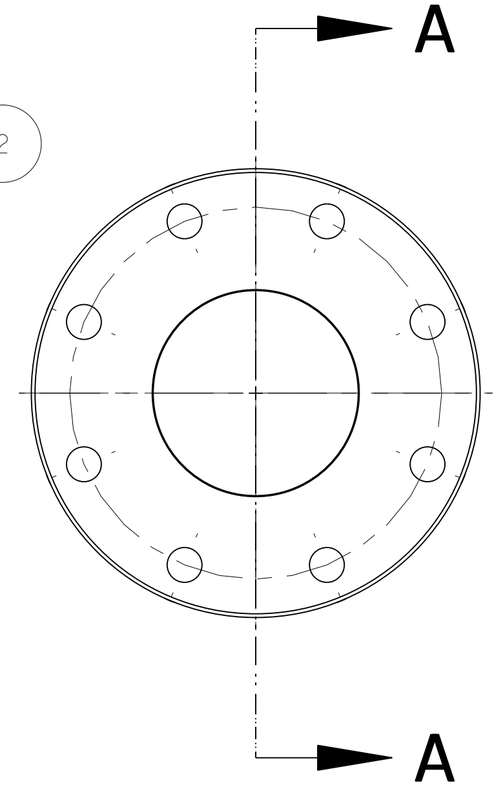

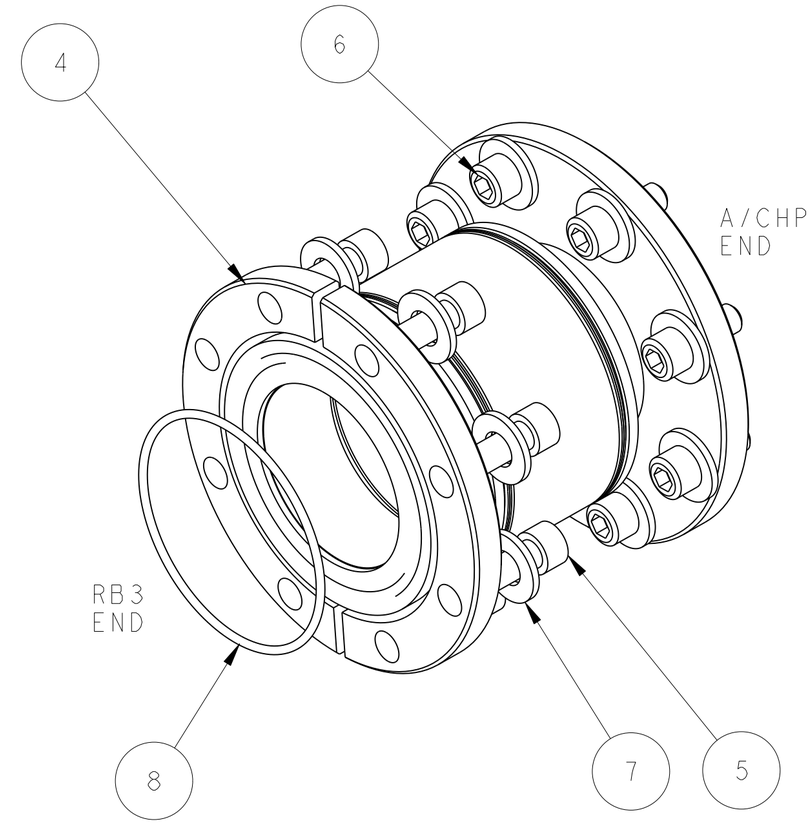

BEAM DIRECTION

SECTION **A-A**
(SPLIT FLANGE OMITTED
FOR CLARITY)

ITEM	PART NO	REQD	DESCRIPTION	MATERIAL
8	-	1	O-RING, 2-033	VITON
7	-	16	WASHER, FLAT, ROUND, .25	SS 18-8
6		8	SCR, SCH, .25-28 UNF X .625 LG	SS 18-8
5		8	SCR, SCH, .25-28 UNF X .75 LG	SS 18-8
4	25B683	1	SPLIT FLANGE, BP7, RB3 SIDE	SS 304L
3	25B682	1	SEAL RING, BP7, RB3 SIDE	SS 304L
2	25B681	1	FLANGE, BP7, A/CHP SIDE	SS 304L
1	25B499	1	BELLOWS ASSEMBLY, BP7, 40MM	-

REV	DWG	CHK	ZONE	DATE	CHANGES
A				08-24-01	INITIAL RELEASE

UNLESS OTHERWISE SPECIFIED
PROJECTION:
TOLERANCES: X.X ± 0.1 | FRAC. ± 1/64 | X.XX ± 0.01 | Angles ± 1.0° | X.XXX ± 0.005 | FINISH 125
DO NOT SCALE PRINT
THREADS ARE CLASS 2
CHAMFER ENDS OF ALL SCREW TREADS 30°
CUT ROUND, 1.5 THREAD RELIEF ON MACHINED THREADS
BREAK EDGES .016 MAX. ON MACHINED WORK
REMOVE BURRS, WELD SPLATTER & LOOSE SCALE
IN ACCORDANCE WITH ASME Y14.5M & B46.1

SHOP ORDERS

SER NO.	-		
ACCT NO.		NO. REQD	DATE ISSD -
DEL TO			DATE REQD -
SURFACE TREATMT	-		
IDENT METHOD	TAG		
PROJECT NUMBER	na		
PROJECT NAME	N/A		
DWG BY	R LA MANTIA		DATE 08-24-01
CHK BY	PAL		DATE 08-24-01
APR BY	DPO		DATE 08-24-01

ERNEST ORLANDO LAWRENCE BERKELEY NATIONAL LABORATORY
UNIVERSITY OF CALIFORNIA - BERKELEY

SNS-FES MEBT
BEAM PIPES
DETAIL ASSEMBLY, BEAM PIPE 7

MICROFILMED:	DWG. TYPE	SHOWN ON	SCALE: 1/1	DO NOT SCALE PRINTS
	ASSEM	25B611	SHEET 1 OF 1	
PATENT CLEAR:	DESIGN ACCT. NO.	CATEGORY CODE	DWG. NO.	SIZE / REV.
	-	FE3312	25B6803	A

DWG. NO. 25B6803 SIZE A REV. 1 SH.

Rev. 1/29/2000 J. R. Owens

Dwg. File: 25B680 Model File: 25B680