ITEM	REQD	PART NUMBER	DESCRIPTION

NOTES (UNLESS OTHERWISE SPECIFIED):

1) DIMENSIONS IN INCHES.

2) MATL: 304 SST, ASTM A269

3) CUT TUBES SQUARE - NO BEVEL.
DEBURR .005 MAXIMUM.

4) FINISHED TUBES ARE TO BE
INDIVIDUALLY WRAPPED IN
BUBBLE WRAP AND SHIPPED TO
LBNL IN A PADDED CONTAINER.

TABULATION	DIM. "A"	NAME	WHERE USED
25B4683-1	0.756	PMT_1	PM_1
		PMT_2	PM_2
		PMT_4	PM_4
25B4683-2	1.321	PMT_3	PM_3
25B4683-3	1.133	PMT_5	PM_4
25B4683-4	1.069	PMT_6	PM_5
25B4683-5	0.995	PMT_7	PM_5

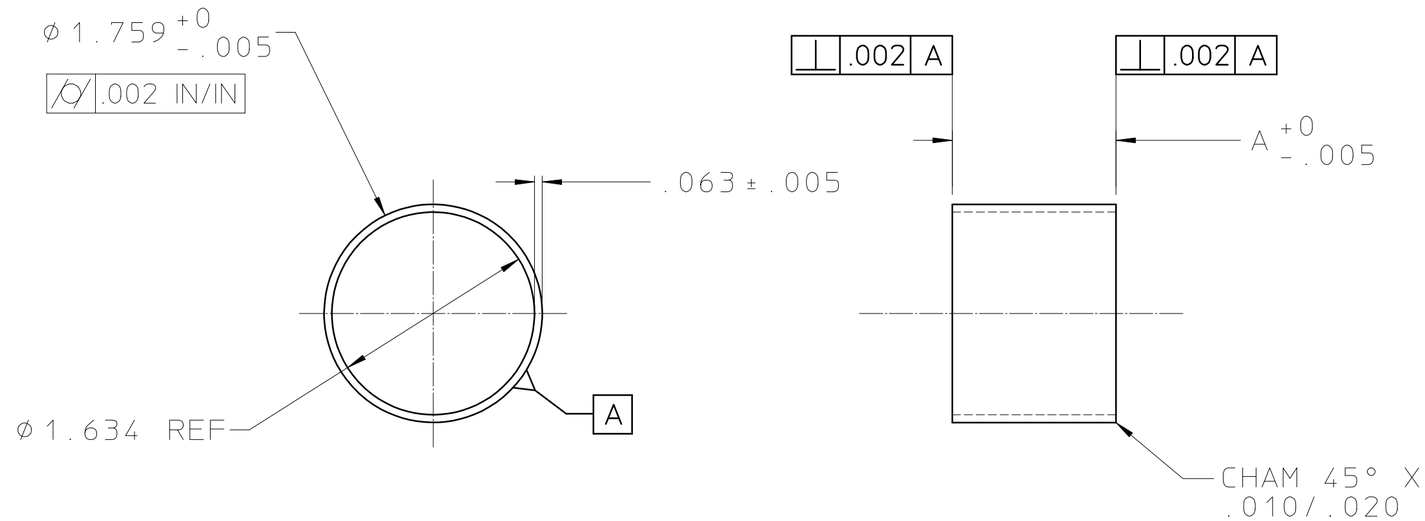

25B4683

REV	DWG	CHK	ZONE	DATE	CHANGES
C	PL	PL		09-04-01	ADDED EXTERNAL CHAMFER
B	PL	PL		07-25-01	-6 DELETED. -3 LENGTH 1.133 WAS .953 -4 LENGTH 1.069 WAS .889 -5 LENGTH .995 WAS .815
A	PL	DO		07-17-01	INITIAL RELEASE

UNLESS OTHERWISE SPECIFIED

TOLERANCES			
	.X ± .1	FRAC. ± 1/64	
	.XX ± .03	ANGLES ± 0.5°	
	.XXX ± .005	FINISH 125	

THREADS ARE CLASS 2
CHAMFER ENDS OF ALL SCREW THREADS 30°.
CUT 1.5 PITCH THRD RELIEF WITH ROUND NOSE TOOL
ON MACHINE CUT THREADS.
BREAK EDGES .016 MAX. ON MACHINED WORK
REMOVE BURRS WELD SPLATTER & LOOSE SCALE
REF: ASME Y14.5M & ANSI B46.1.

SHOP ORDERS

ACCT. NO.	SERIAL NO.	
DATE ISSD	DATE REQD.	NO. REQD.
DELIVER TO		
SURFACE TREATMENT	CLEAN	
IDENT. METH.	BAG AND TAG	
DWG. BY	PAL	DATE 07-16-01
CHK. BY	D. OSHATZ	DATE 07-17-01

LAWRENCE BERKELEY NATIONAL LABORATORY
UNIVERSITY OF CALIFORNIA-BERKELEY

SNS - FES MEBT

BEAM PIPE COMPONENTS

STOCK, PM TUBE

PATENT CLEAR	DWG. TYPE	SHOWN ON	SCALE	DO NOT SCALE PRINTS
	DETAIL		FULL	
MICROFILMED	DESIGN ACCT. NO.	CATEGORY CODE	DWG. NO.	SIZE / REV.
		FE3313	25B4683	C