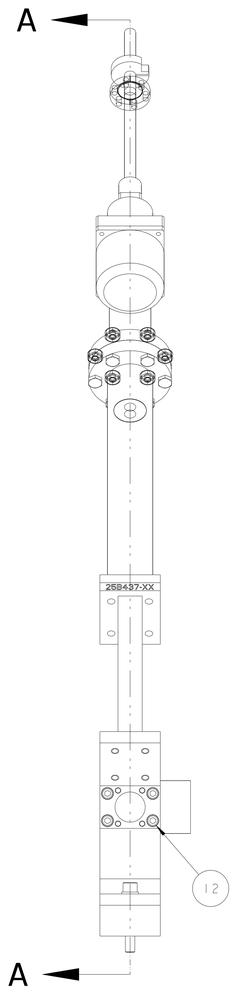

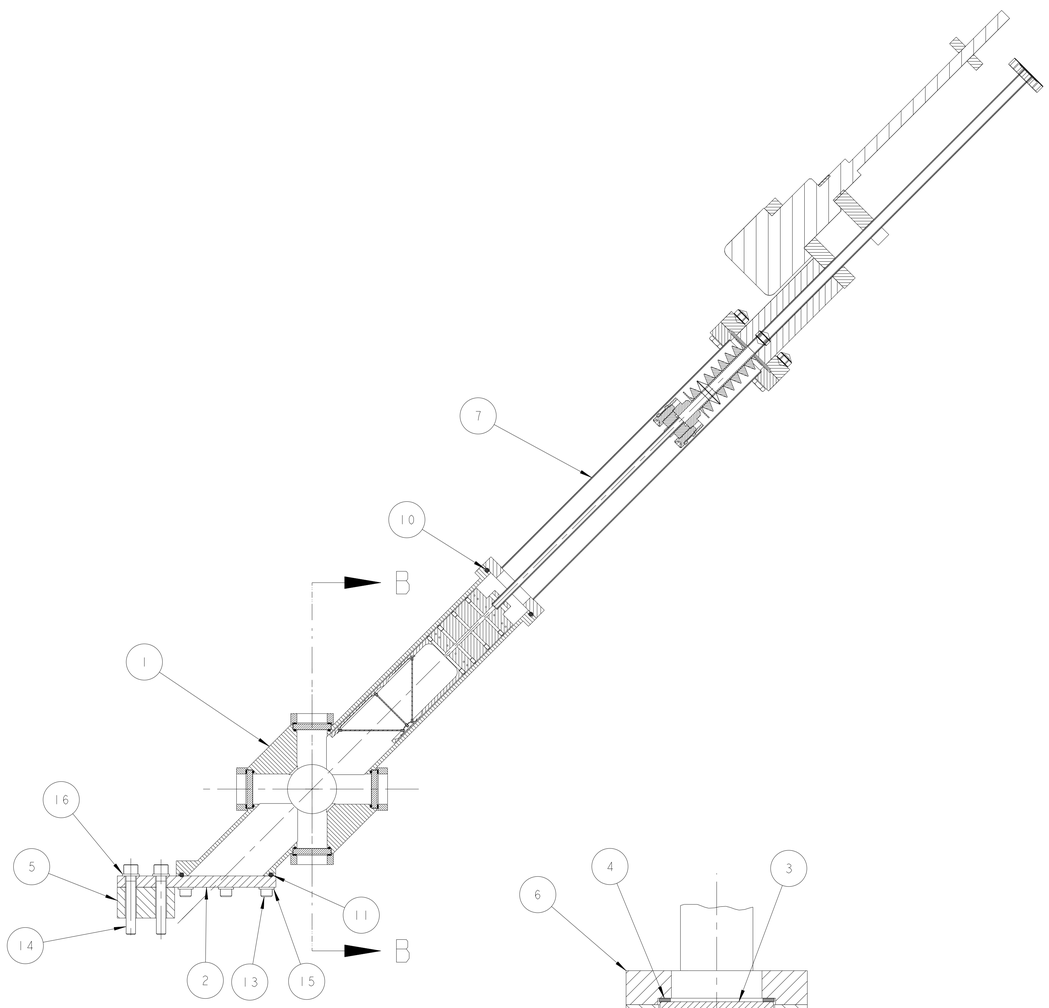

SECTION **A-A**

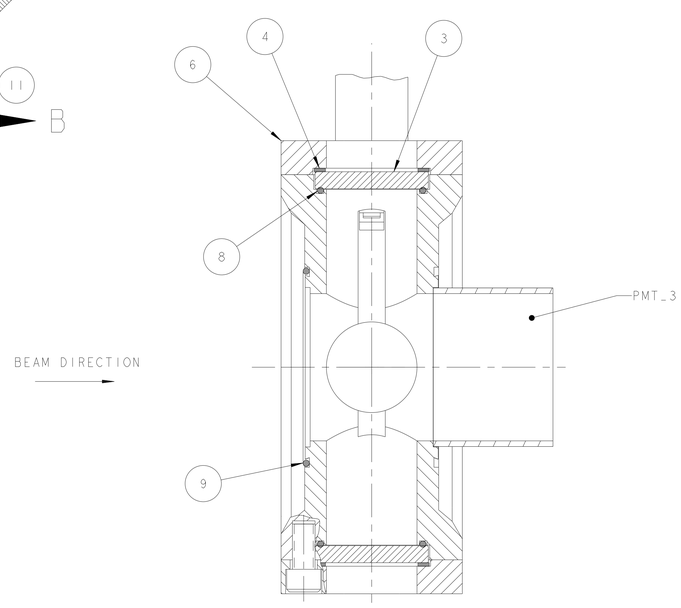

BEAM DIRECTION

SECTION **B-B**
SCALE 3/2

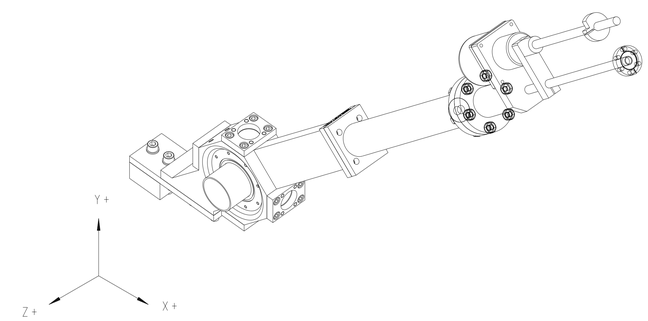

ITEM	PART NO	REQD	DESCRIPTION	MATERIAL
16	98017A690	2	5/16" FLAT WASHER AN 960 , MCMASTER-CARR OR EQUIV	-
15	98017A660	6	1/4" DIA FLAT WASHER AN 960 , MCMASTER-CARR OR EQUIV	18-8 SS
14		2	5/16-18 UNC, 2.0 LG SHC SCREW	
13		6	1/4-28 UNF, .750 LG SOC HD SCREW, SILVER PLATED	18-8 SS
12		16	1/4-28 UNF, .500 LG SOC HD SCREW	18-8 SS
11		1	O-RING, PARKER # 2-226	VITON A
10		1	O-RING, PARKER # 2-221	VITON A
9	-	1	2-033 O-RING	VITON
8	-	4	O-RING, PARKER # 2-023	VITON A
7	BNL 5706001	1	WIRE SCANNER ASSEMBLY (BNL)	-
6	25B445	4	PM WINDOW FLANGE	304 SS
5	25B121	1	PM SPACER	ALUMINUM 6061
4	25B113	4	PM WINDOW SPACER	NEOPRENE
3	25B112	4	PM WINDOW	PYREX GLASS
2	25B107	1	PM BOTTOM CAP	304 SS
1	25B444	1	PM3 BEAMBOX WELDMENT	-

REV	DWG	CHK	ZONE	DATE	CHANGES
B	PAL			11/27/01	REFORMATTED B/M AND DRAWING
A	AZ			6/28/01	INITIAL RELEASE

UNLESS OTHERWISE SPECIFIED
PROJECTION:
TOLERANCES: X.X ± 0.1 FRAC. ± 1/64; X.XX ± 0.01 Angles ± 0.1°; X.XXX ± 0.005 FINISH 125
DO NOT SCALE PRINT
THREADS ARE CLASS 2
CHAMFER ENDS OF ALL SCREW THREADS 30°
CUT ROUND, 1.5 THREAD RELIEF ON MACHINED THREADS
BREAK EDGES .016 MAX. ON MACHINED WORK
REMOVE BURRS, WELD SPLATTER & LOOSE SCALE
IN ACCORDANCE WITH ASME Y14.5M & BAL.1

SHOP ORDERS
ACCT NO. / NO. REQD / SER NO. / DATE ISSD / DEL TO / DATE REQD
SURFACE TREATMT -
IDENT. TAG METHOD
PROJECT NUMBER no
PROJECT NAME N/A
DWG BY Andrew Zachoszcz DATE 10-Oct-01
CHK BY Daryl Oshatz DATE
APP BY Daryl Oshatz DATE

ERNEST ORLANDO LAWRENCE BERKELEY NATIONAL LABORATORY
UNIVERSITY OF CALIFORNIA - BERKELEY

SNS - FES MEBT
PROFILE MONITOR
PM3 BEAMBOX ASSEMBLY

MICROFILMED: | DWG. TYPE: ASSEM | SHOWN ON: - | SCALE: 1/2 | DO NOT SCALE PRINTS
PATENT CLEAR: | DESIGN ACCT. NO.: - | CATEGORY CODE: FE3313 | DWG. NO.: 25B4436 | SHEET 1 OF 1 | REV.: B

25B4436 B 1