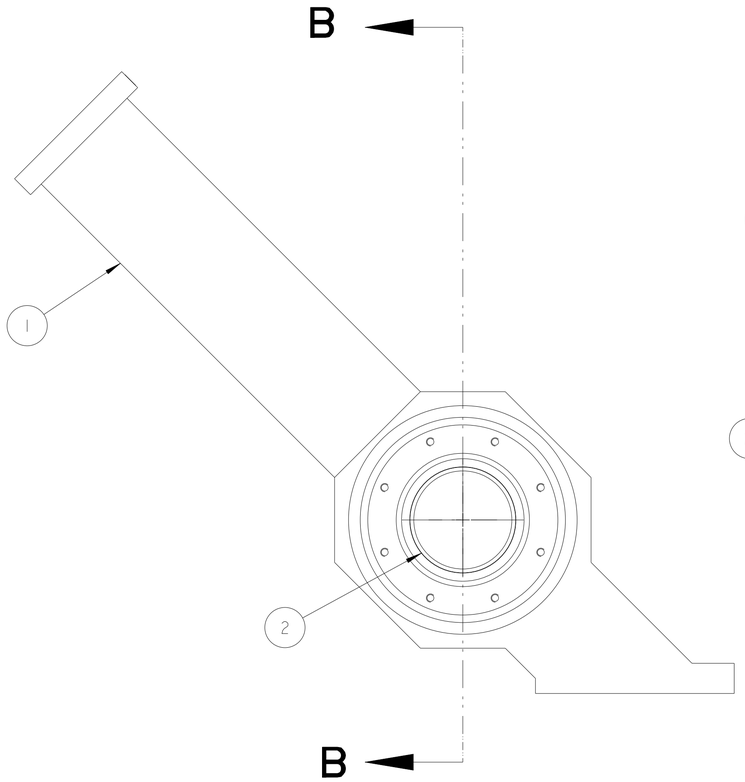

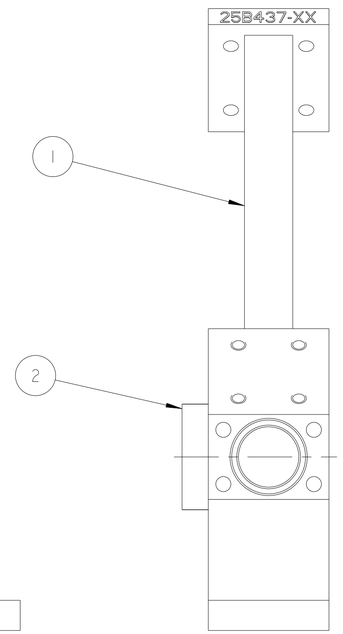

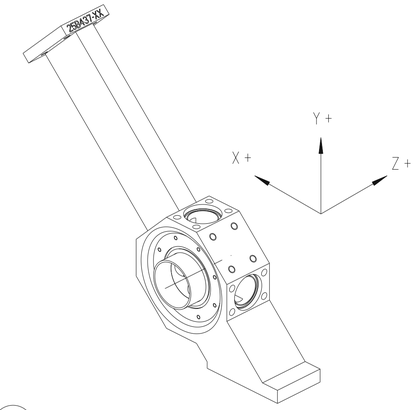

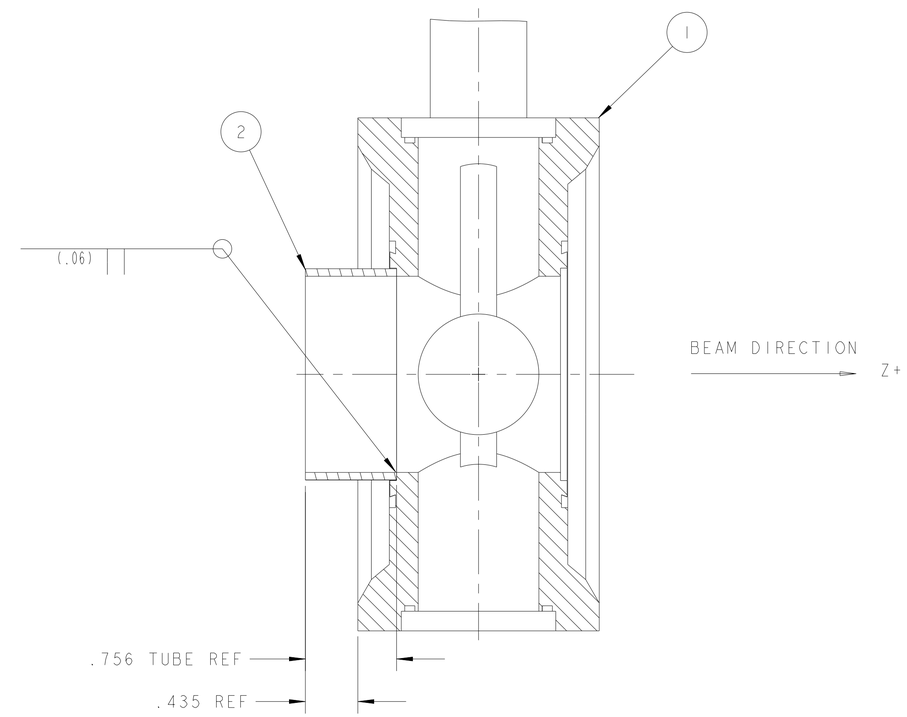

SECTION **B-B**
SCALE 3/2

ITEM	PART NO	REQD	DESCRIPTION	MATERIAL
2	25B468-1	1	STOCK, PM TUBE (PMT_1,2,4)	SS 304L
1	25B437	1	PROFILE MONITOR BEAMBOX	316L PRODEC

NOTES:

1. FINISHED PART TO BE VACUUM TIGHT.
   LEAK RATE NOT TO EXCEED 1 X 10^-8 TORR - LITERS PER SECOND HELIUM.
2. ULTRA-HIGH VACUUM CLEANING AND PACKING REQUIRED.
3. ASSEMBLE IN CLEAN ENVIRONMENT.
   AFTER ASSEMBLY AND WELDING, WRAP TO MAINTAIN CLEANLINESS.

REV	DWG	CHK	ZONE	DATE	CHANGES
A	AZ			2/28/01	INITIAL RELEASE

UNLESS OTHERWISE SPECIFIED
PROJECTION:
TOLERANCES: X.X ± 0.1 | FRAC. ± 1/64 | X.XX ± 0.01 | Angles ± 1.0° | X.XXX ± 0.005 | FINISH 125
DO NOT SCALE PRINT
THREADS ARE CLASS 2
CHAMFER ENDS OF ALL SCREW TREADS 30°
CUT ROUND, 1.5 THREAD RELIEF ON MACHINED THREADS
BREAK EDGES .016 MAX. ON MACHINED WORK
REMOVE BURRS, WELD SPLATTER & LOOSE SCALE
IN ACCORDANCE WITH ASME Y14.5M & B46.1

SHOP ORDERS
ACCT NO. | NO. REQD | SER NO. -
DEL TO | DATE ISSD - | DATE REQD -
SURFACE TREATMT -
IDENT METHOD TAG
PROJECT NUMBER na
PROJECT NAME N/A
DWG BY Andrew Zachoszcz | DATE 06-Sep-01
CHK BY Daryl Oshatz | DATE
APR BY Daryl Oshatz | DATE

ERNEST ORLANDO LAWRENCE BERKELEY NATIONAL LABORATORY
UNIVERSITY OF CALIFORNIA - BERKELEY

SNS - FES MEBT
PROFILE MONITOR MECHANICAL
PM2 BEAMBOX WELDMENT

MICROFILMED: | PATENT CLEAR:
DWG. TYPE: ASSEM | DESIGN ACCT. NO.: - | SHOWN ON: - | CATEGORY CODE: FE3313
SCALE: 3/4 | DO NOT SCALE PRINTS
SHEET 1 OF 1
DWG. NO. 25B4384 | SIZE | REV. A

Dwg. File: 25B4384 Model File: 25B438