| DWG. NO. | SIZE | REV. | SH. |
|---|---|---|---|
| 25B4274 | A | | 1 |

## NOTES:

1. ASSEMBLE IN CLEAN ENVIRONMENT.
   AFTER ASSEMBLY, WRAP TO MAINTAIN CLEANLINESS.
2. TO ACHIEVE PROPER LOCATION OF CHOPPER PLATES
   SHIMS MAY BE ADDAED.

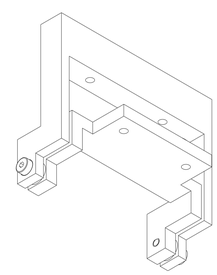

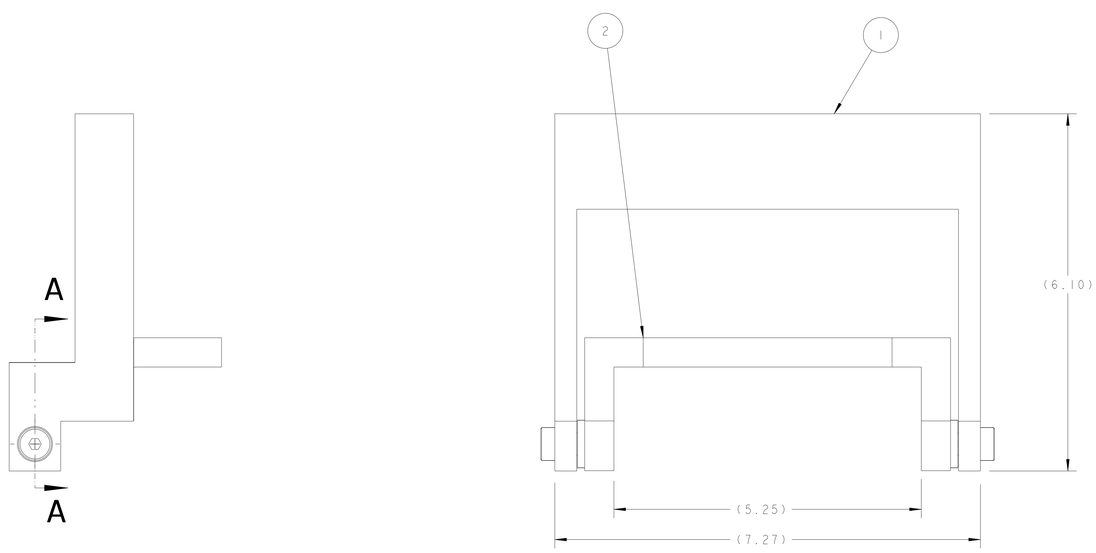


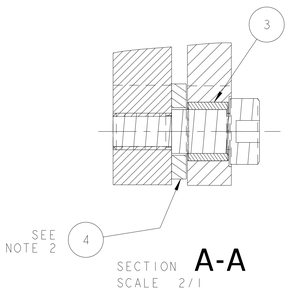


| ITEM | PART NO | REQD | DESCRIPTION | MATERIAL |
|---|---|---|---|---|
| 5 | PZ-39 | 2 | SHOULDER SCREW | BERG CATALOG |
| 4 | 98370A030 | 2 | 3/8 FLAT WASHER, 1/8" THK, MCMASTER-CARR OR EQUIV. | - |
| 3 | 25B432 | 2 | HINGE ASSEMBLY BEARING | VESPEL SP-3 |
| 2 | 25B431 | 1 | INNER HINGE ASSEMBLY | 304 SS |
| 1 | 25B428 | 1 | OUTER HINGE ASSEMBLY | 304 SS |

| REV | DWG | CHK | ZONE | DATE | CHANGES |
|---|---|---|---|---|---|
| B | AZ | | | 5/24/01 | CHANGED SHOLDER SCREW SIZE FROM PZ-39 TO PZ-40 |
| A | AZ | | | 1/23/01 | INITIAL RELEASE |

UNLESS OTHERWISE SPECIFIED
PROJECTION:
TOLERANCES: X.X ± 0.1 FRAC. ± 1/64; X.XX ± 0.03 Angles ± 1.0°; X.XXX ± 0.010 FINISH
DO NOT SCALE PRINT
THREADS ARE CLASS 2
CHAMFER ENDS OF ALL SCREW THREADS 30°
CUT ROUND, 1.5 THREAD RELIEF ON MACHINED THREADS
BREAK EDGES .016 MAX. ON MACHINED WORK
REMOVE BURRS, WELD SPLATTER & LOOSE SCALE
IN ACCORDANCE WITH ASME Y14.5M & B46.1

SHOP ORDERS
ACCT NO. / NO. REQD / SER NO. -
PCL ID / DATE ISSD -
SURFACE TREATMT / DATE REQD -
IDENT METHOD: TAG
PROJECT NUMBER: no
PROJECT NAME: N/A
DWG BY: A ZACHOSZCZ — DATE: 05-Jan-01
CHK BY: None — DATE
APR BY: None — DATE

ERNEST ORLANDO LAWRENCE
BERKELEY NATIONAL LABORATORY
UNIVERSITY OF CALIFORNIA - BERKELEY

SNS - FES MEBT
BEAM TRANSPORT SYSTEMS
CHOPPER BOX HINGE ASSEMBLY

MICROFILMED: | DWG. TYPE: ASSEM | SHOWN ON: - | SCALE: 1/1 | DO NOT SCALE PRINTS
SHEET 1 OF 1
PATENT CLEAR: | DESIGN ACCT. NO.: - | CATEGORY CODE: FE3312 | DWG. NO.: 25B4274 | SIZE: A | REV.