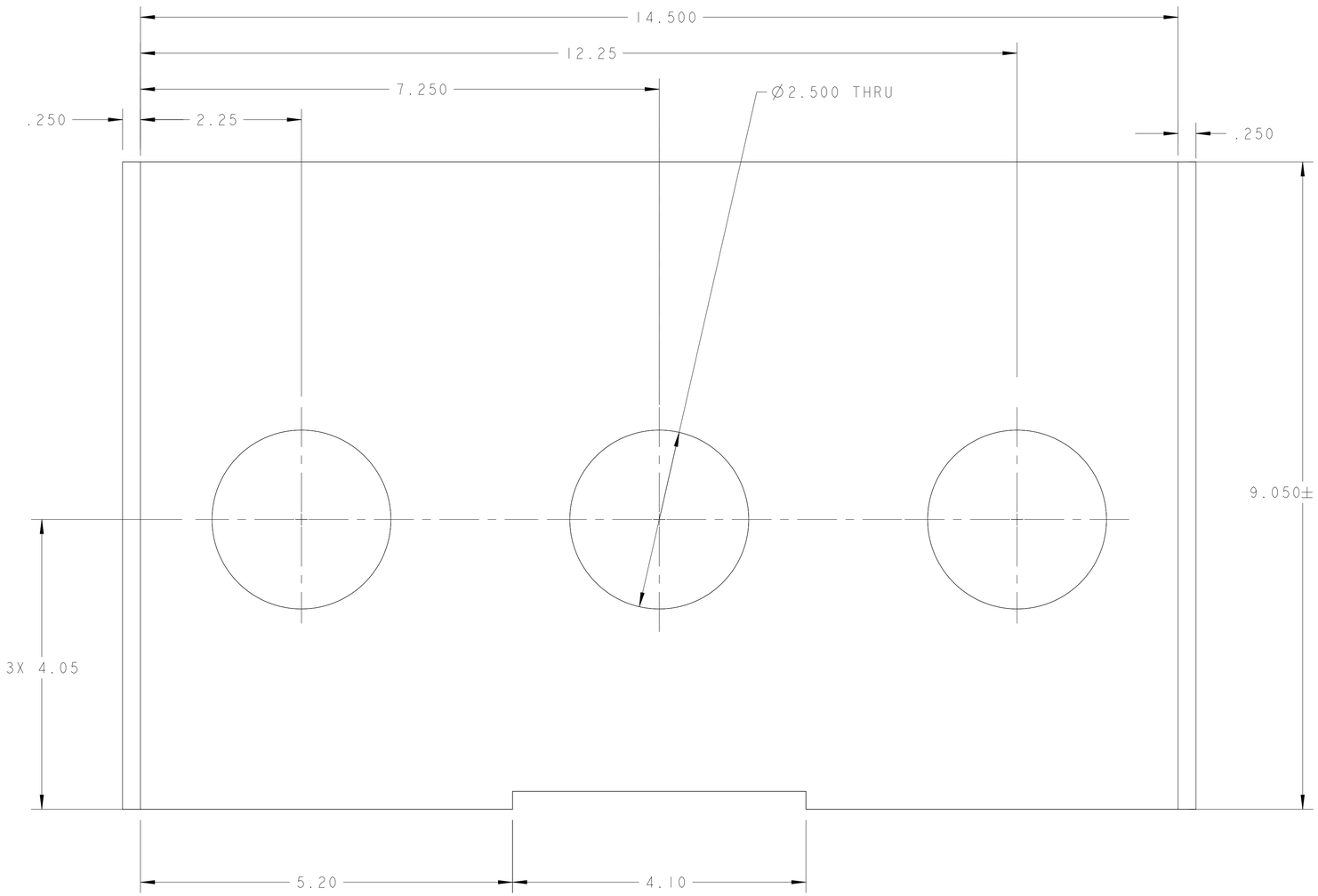

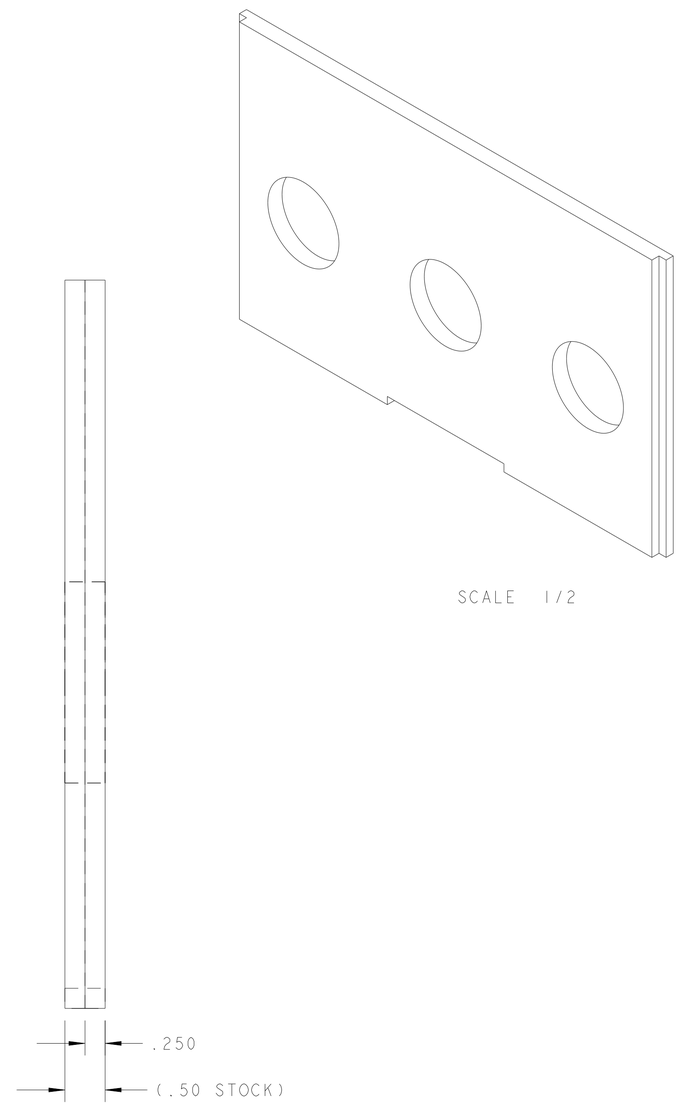

SCALE 1/2

D	AZ			3/22/01	ADDED .25" TABS ON ENDS AND .25" CUT IN THE MIDLE
C	AZ			2/2/01	RAISED WINDOW HOLES FROM 3.5" TO 3.8"
B	AZ		C2	1/23/01	CHANGED DIMENSION 8.500 TO 8.800
A	AZ			1/15/01	INITIAL RELEASE.
REV	DWG	CHK	ZONE	DATE	CHANGES

UNLESS OTHERWISE SPECIFIED
PROJECTION:

TOLERANCES

X.X ± 0.1	FRAC. ± 1/64
X.XX ± 0.03	Angles ± 1.0°
X.XXX ± 0.010	FINISH 125

DO NOT SCALE PRINT

THREADS ARE CLASS 2
CHAMFER ENDS OF ALL SCREW TREADS 30°
CUT ROUND, 1.5 THREAD RELIEF ON MACHINED THREADS
BREAK EDGES .016 MAX. ON MACHINED WORK
REMOVE BURRS, WELD SPLATTER & LOOSE SCALE
IN ACCORDANCE WITH ASME Y14.5M & B46.1

1/2" PLATE	304 SS	-
DESCRIPTION	MATERIAL	MAT. LOCATION

SHOP ORDERS

ACCT NO.	NO. REQD	SER NO.	-
		DATE ISSD	-
DEL TO		DATE REQD	-
SURFACE TREATMT	-		
IDENT METHOD	TAG		
PROJECT NUMBER	na		
PROJECT NAME	N/A		
DWG BY	A ZACHOSZCZ	DATE	08-Dec-00
CHK BY	None	DATE	
APR BY	None	DATE	

ERNEST ORLANDO LAWRENCE
BERKELEY NATIONAL LABORATORY
UNIVERSITY OF CALIFORNIA - BERKELEY

SNS - FE MEBT
BEAM TRANSPORT SYSTEMS
CHOPPER BOX SIDE PLATE

MICROFILMED:	DWG. TYPE	SHOWN ON	SCALE: 1/1	DO NOT SCALE PRINTS
	PART	25B421	SHEET 1 OF 1	
PATENT CLEAR:	DESIGN ACCT. NO.	CATEGORY CODE	DWG. NO.	SIZE / REV.
	-	FE3312	25B4254	D

Dwg. File: 25B4254 Model File: 25B425_