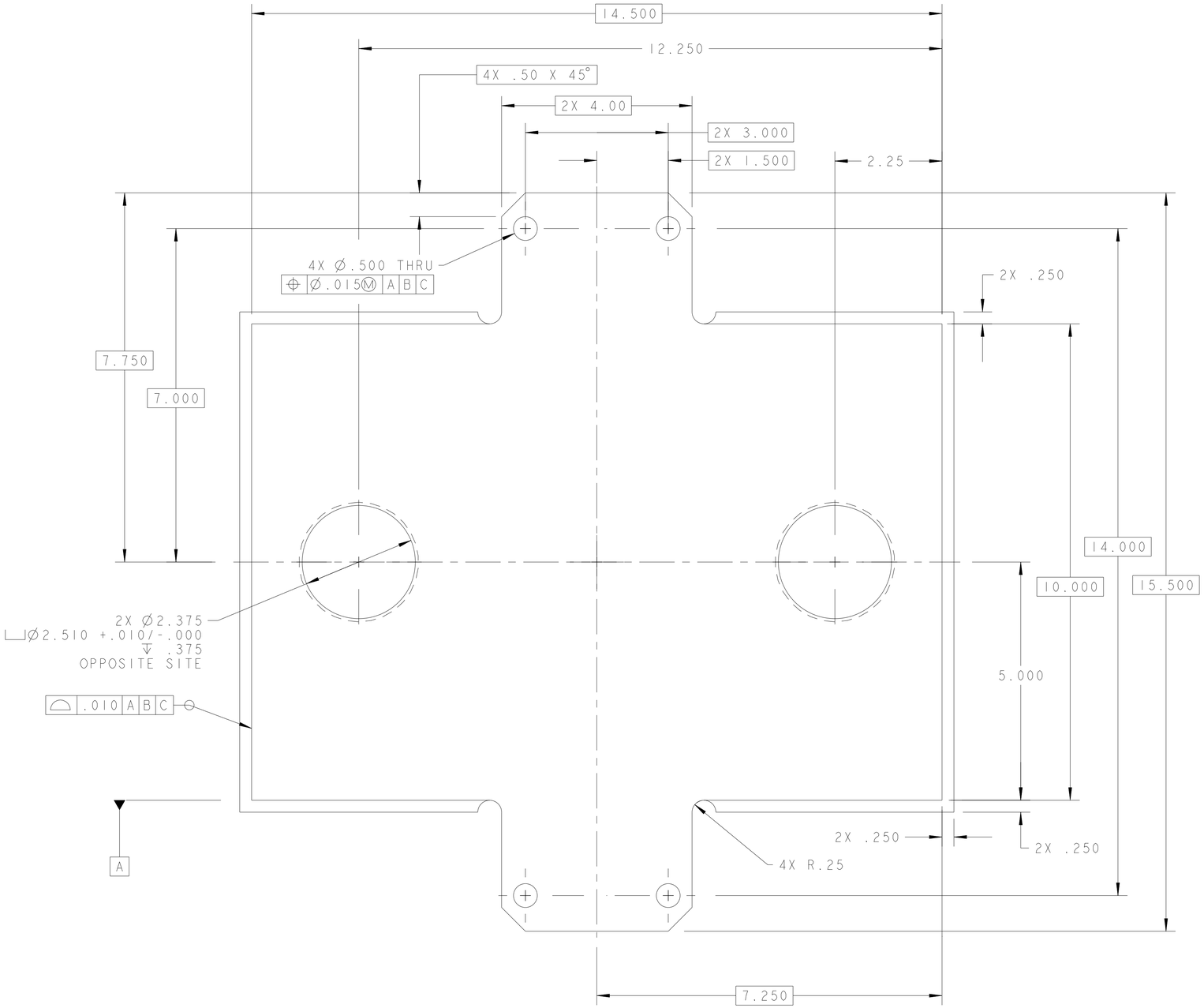

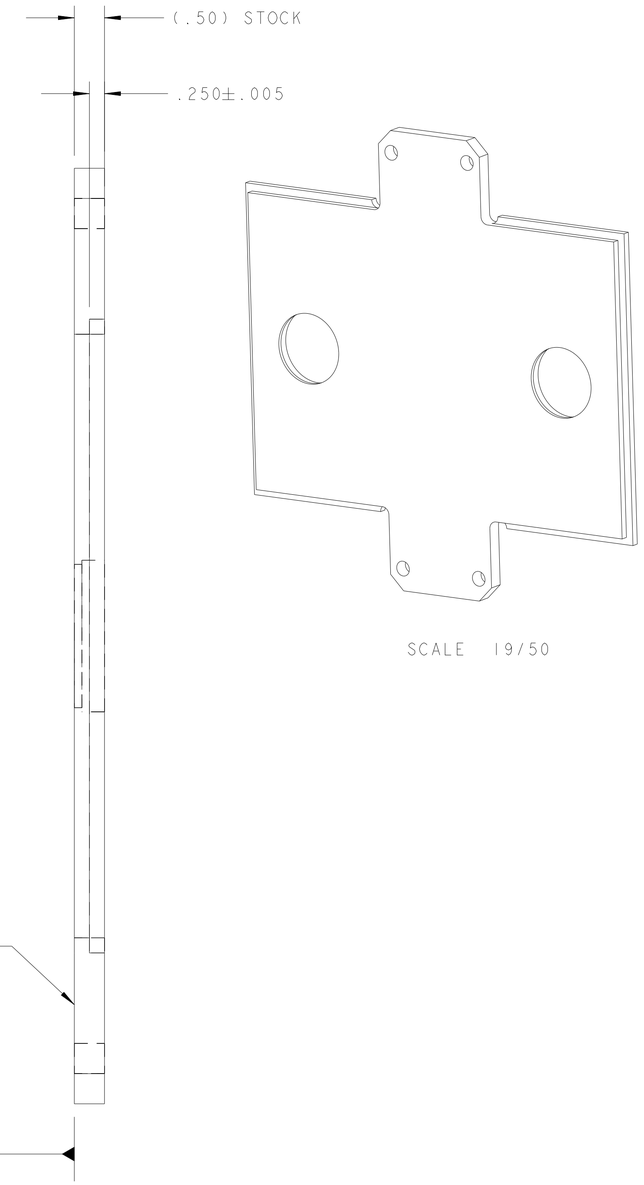

SCALE 19/50

1/2" PLATE			304 SS		-
DESCRIPTION			MATERIAL		MAT. LOCATION

REV	DWG	CHK	ZONE	DATE	CHANGES
D	AZ			3/20/01	ADDED 1/4" STEPS TO IMPROVE ASSEMBLY WORK
C	AZ			2/7/01	EXTENDED PLATE FROM 14.500 TO 15.000
B	AZ			1/23/01	UPDATED MODEL.
A	AZ			1/10/01	INITIAL RELEASE

UNLESS OTHERWISE SPECIFIED
PROJECTION:
TOLERANCES: X.X ± 0.1 FRAC. ± 1/64; X.XX ± 0.03 Angles ± 1.0°; X.XXX ± 0.010 FINISH 125
DO NOT SCALE PRINT
THREADS ARE CLASS 2
CHAMFER ENDS OF ALL SCREW TREADS 30°
CUT ROUND, 1.5 THREAD RELIEF ON MACHINED THREADS
BREAK EDGES .016 MAX. ON MACHINED WORK
REMOVE BURRS, WELD SPLATTER & LOOSE SCALE
IN ACCORDANCE WITH ASME Y14.5M & B46.1

SHOP ORDERS
ACCT NO. / NO. REQD / SER NO. -
DEL TO / DATE ISSD - / DATE REQD -
SURFACE TREATMT -
IDENT METHOD TAG
PROJECT NUMBER na
PROJECT NAME N/A
DWG BY A ZACHOSZCZ DATE 13-Dec-00
CHK BY None DATE
APR BY None DATE

ERNEST ORLANDO LAWRENCE BERKELEY NATIONAL LABORATORY
UNIVERSITY OF CALIFORNIA - BERKELEY

SNS - FES MEBT
BEAM TRANSPORT SYSTEMS
CHOPPER BOX BOTTOM PLATE

MICROFILMED:
PATENT CLEAR:

DWG. TYPE	SHOWN ON	SCALE: 3/4	DO NOT SCALE PRINTS
PART	25B421	SHEET 1 OF 1	
DESIGN ACCT. NO.	CATEGORY CODE	DWG. NO.	SIZE / REV.
-	FE3312	25B4224	D

Dwg. File: 25B4224 Model File: 25B4224