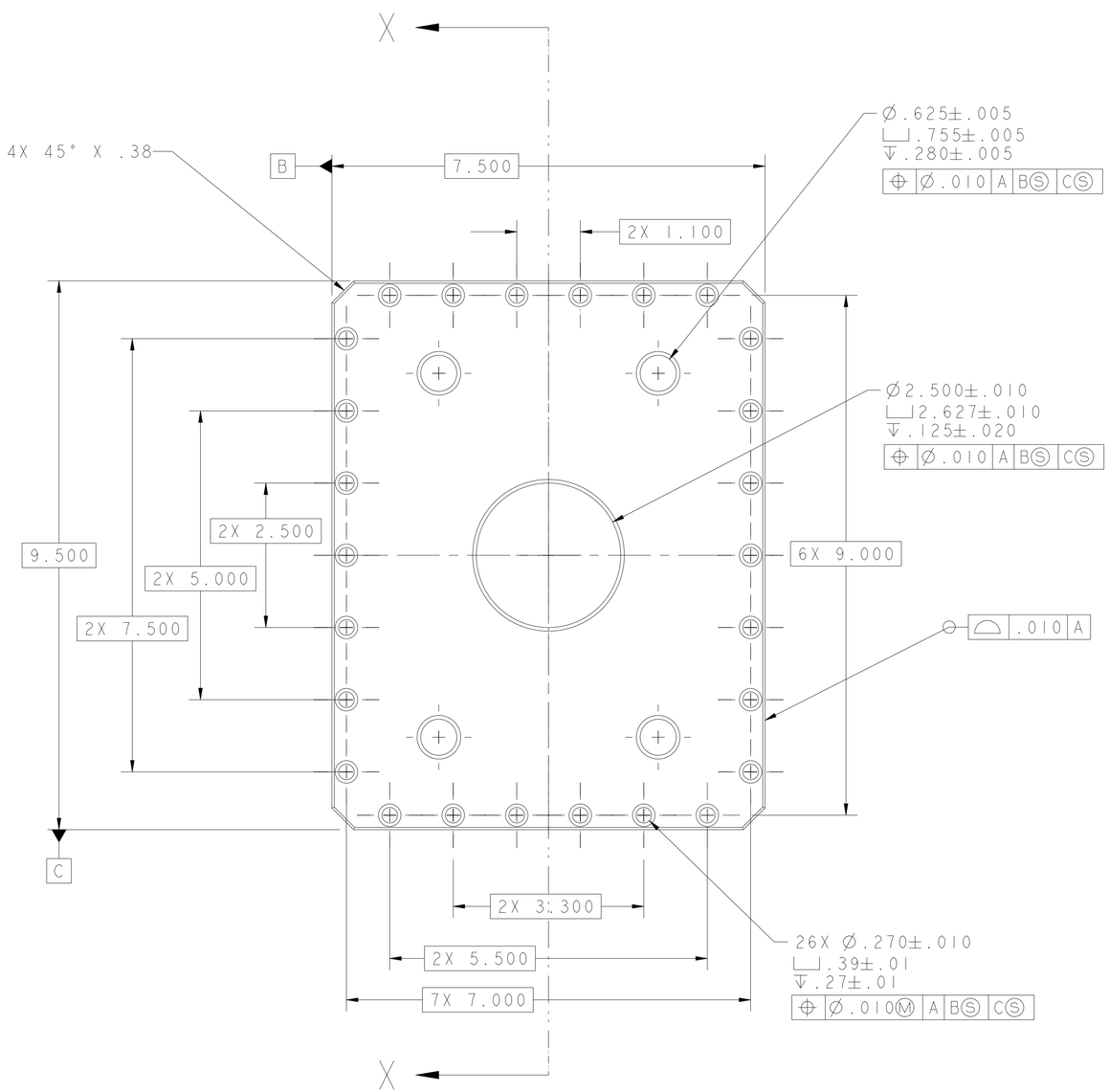

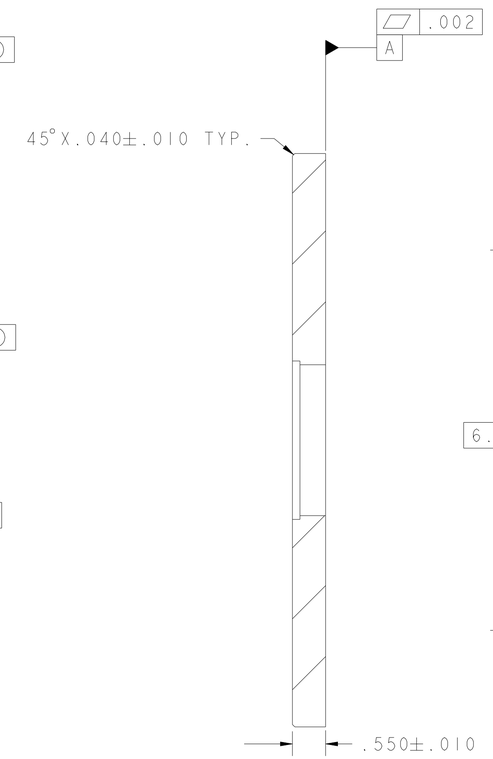

SECTION X - X

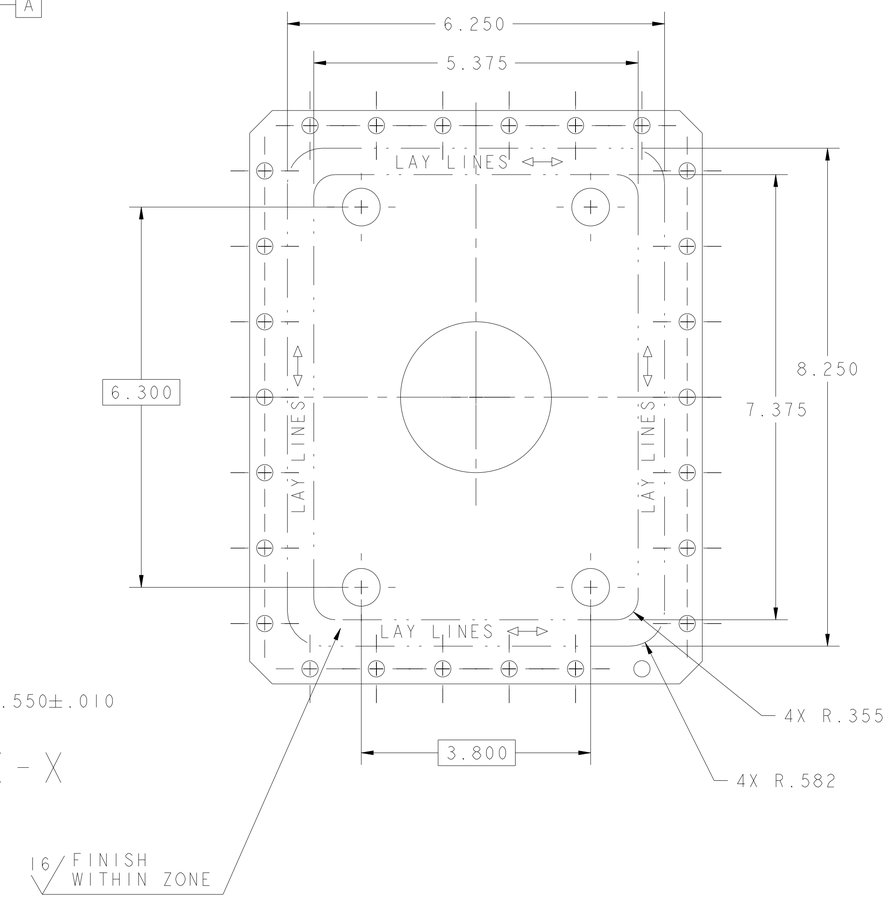

REV	DWG	CHK	ZONE	DATE	CHANGES
B3			C1	1/16/01	ADD DOUBLE ARROWS TO LAYLINE NOTE
B2			C1	1/16/01	CHANGE 8.125 TO 8.250
B1			D2	1/16/01	CHANGE 6.125 TO 6.250
A				1/04/01	RELEASE FOR QUOTE

UNLESS OTHERWISE SPECIFIED
PROJECTION:
TOLERANCES: X.X ± 0.1 | FRAC. ± 1/64 | X.XX ± 0.03 | Angles ± 1.0° | X.XXX ± 0.010 | FINISH 125
DO NOT SCALE PRINT
THREADS ARE CLASS 2
CHAMFER ENDS OF ALL SCREW TREADS 30°
CUT ROUND, 1.5 THREAD RELIEF ON MACHINED THREADS
BREAK EDGES .016 MAX. ON MACHINED WORK
REMOVE BURRS, WELD SPLATTER & LOOSE SCALE
IN ACCORDANCE WITH ASME Y14.5M & B46.1

DESCRIPTION	MATERIAL	MAT. LOCATION
-	304 SS	-

SHOP ORDERS
ACCT NO. | NO. REQD | SER NO. -
DEL TO | DATE ISSD - | DATE REQD -
SURFACE TREATMT -
IDENT METHOD TAG
PROJECT NUMBER na
PROJECT NAME N/A
DWG BY Allan DeMello | DATE 13-Dec-00
CHK BY D. Oshatz | DATE
APR BY D. Oshatz | DATE

ERNEST ORLANDO LAWRENCE BERKELEY NATIONAL LABORATORY
UNIVERSITY OF CALIFORNIA - BERKELEY

SNS - FES MEBT
CHOPPER TARGET
VACUUM CHAMBER - TARGET ACTUATOR FLANGE

MICROFILMED: | PATENT CLEAR:
DWG. TYPE: PART | SHOWN ON: 25B410 | SCALE: 3/4 | DO NOT SCALE PRINTS
DESIGN ACCT. NO.: - | CATEGORY CODE: FE3312 | DWG. NO. 25B4114 | SIZE B | REV.
SHEET 1 OF 1

Dwg. File: 25B411 Model File: 25B411