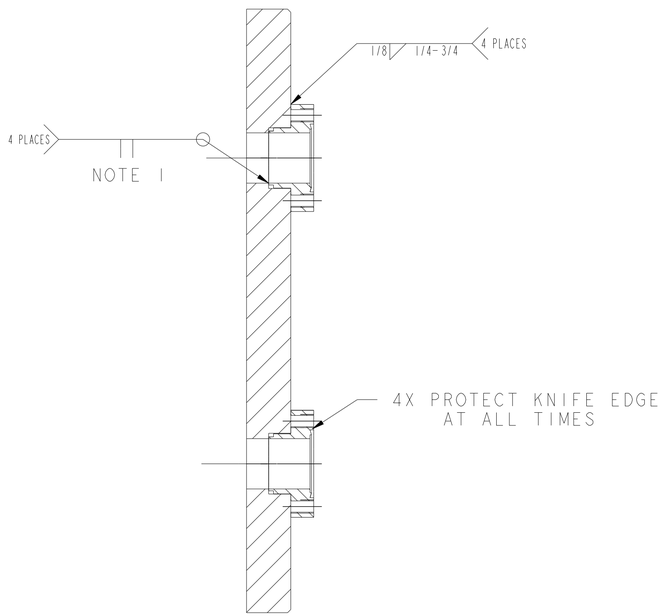

SECTION Y - Y

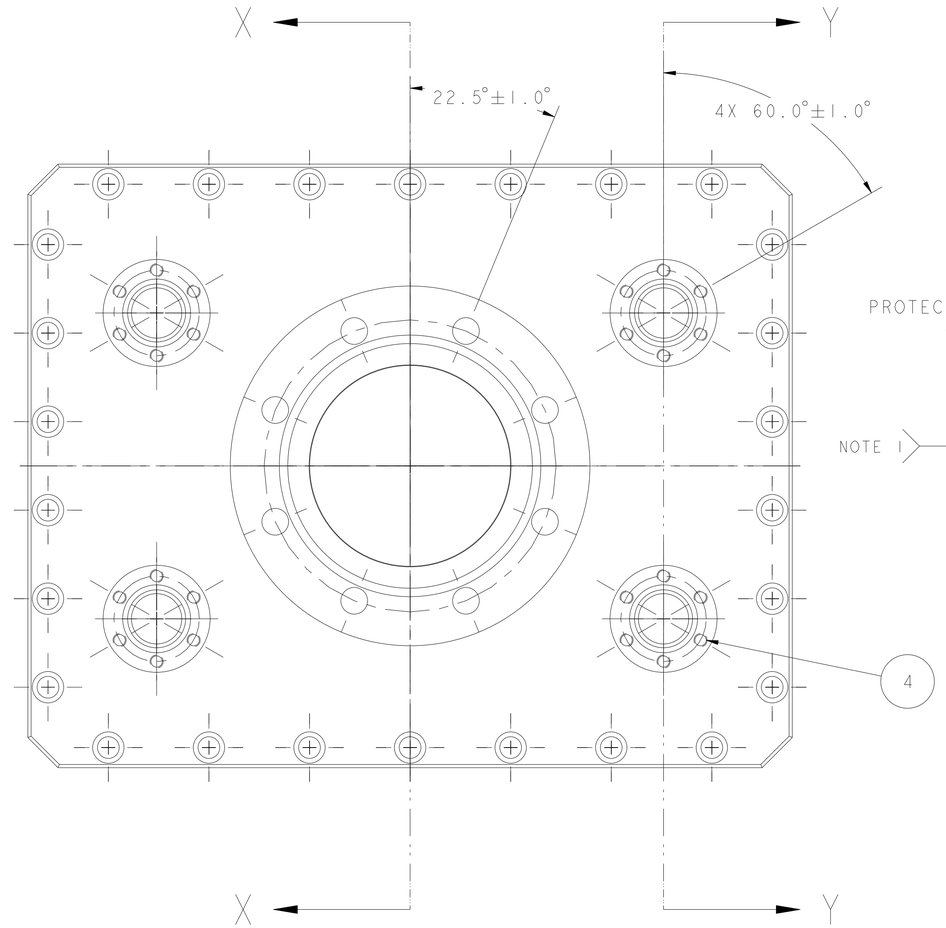

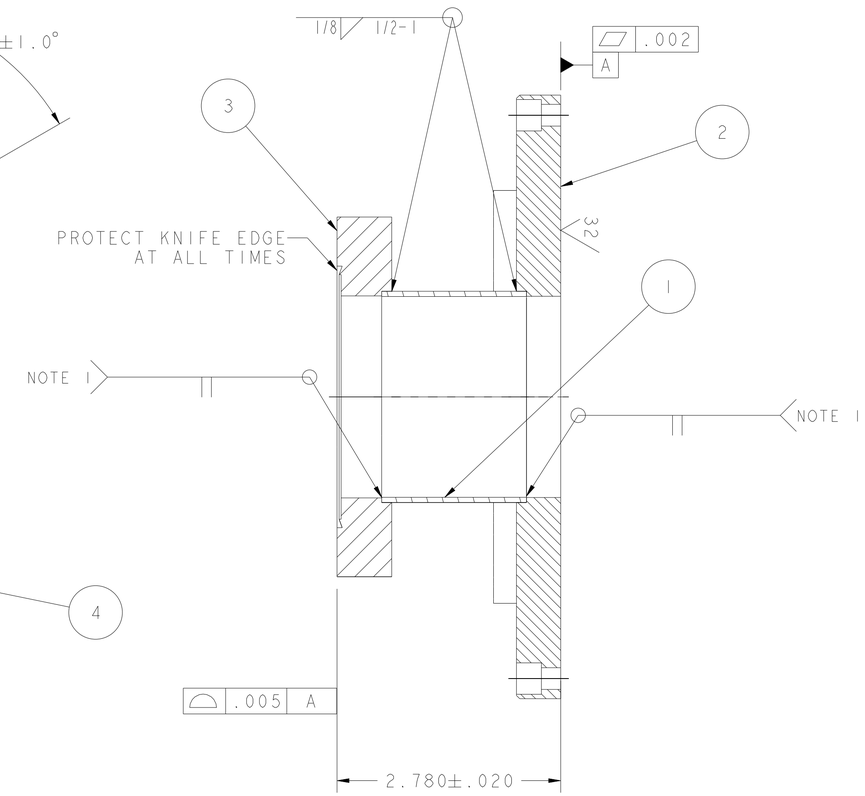

SECTION X - X

NOTES:

1. FINISHED PART TO BE VACUUM TIGHT.
   LEAK RATE NOT TO EXCEED 1 X 10^-8 TORR - LITERS PER SECOND HELIUM.
2. ULTRA-HIGH VACUUM CLEANING AND PACKING REQUIRED.
3. ASSEMBLE IN CLEAN ENVIRONMENT.
   AFTER ASSEMBLY AND WELDING, WRAP TO MAINTAIN CLEANLINESS.
4. PROTECT CONFLAT FLANGE KNIFE EDGE AT ALL TIMES.

ITEM	PART NO	REQD	DESCRIPTION	MATERIAL
4	MDC F133075T	4	MINI-CONFLAT FLANGE	304 SS
3	25B412	1	TARGET FEEDTHRU PORT - CONFLAT FLANGE	304 SS
2	25B411	1	VACUUM CHAMBER - TARGET ACTUATOR FLANGE	304 SS
1	-	1	TARGET FEEDTHRU PORT - TUBE, 2.625 OD X .065 WALL	304 SS

REV	DWG	CHK	ZONE	DATE	CHANGES

UNLESS OTHERWISE SPECIFIED
PROJECTION:
TOLERANCES: X.X ± 0.1 | FRAC. ± 1/64 | X.XX ± 0.03 | Angles ± 1.0° | X.XXX ± 0.010 | FINISH 125
DO NOT SCALE PRINT
THREADS ARE CLASS 2
CHAMFER ENDS OF ALL SCREW TREADS 30°
CUT ROUND, 1.5 THREAD RELIEF ON MACHINED THREADS
BREAK EDGES .016 MAX. ON MACHINED WORK
REMOVE BURRS, WELD SPLATTER & LOOSE SCALE
IN ACCORDANCE WITH ASME Y14.5M & B46.1

SHOP ORDERS
ACCT NO. | NO. REQD. | SER NO. -
DEL TO | DATE ISSD -
DATE REQD -
SURFACE TREATMT -
IDENT METHOD TAG
PROJECT NUMBER na
PROJECT NAME N/A
DWG BY Allan DeMello | DATE 05-Dec-00
CHK BY D. Oshatz | DATE
APR BY D. Oshatz | DATE

ERNEST ORLANDO LAWRENCE
BERKELEY NATIONAL LABORATORY
UNIVERSITY OF CALIFORNIA - BERKELEY

SNS - FES MEBT
CHOPPER TARGET
VACUUM CHAMBER - TARGET ACTUATOR FLANGE WELDMENT

MICROFILMED: | PATENT CLEAR:
DWG. TYPE: ASSEM | SHOWN ON: 25B400 | SCALE: 1/1 | DO NOT SCALE PRINTS
SHEET 1 OF 1
DESIGN ACCT. NO.: - | CATEGORY CODE: FE3312 | DWG. NO. 25B4104 | SIZE A | REV. A