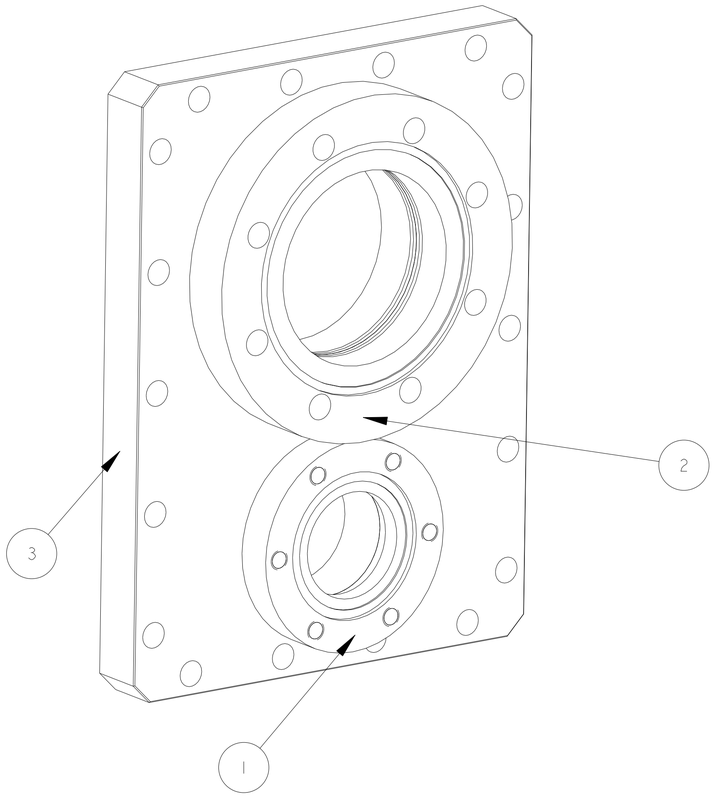

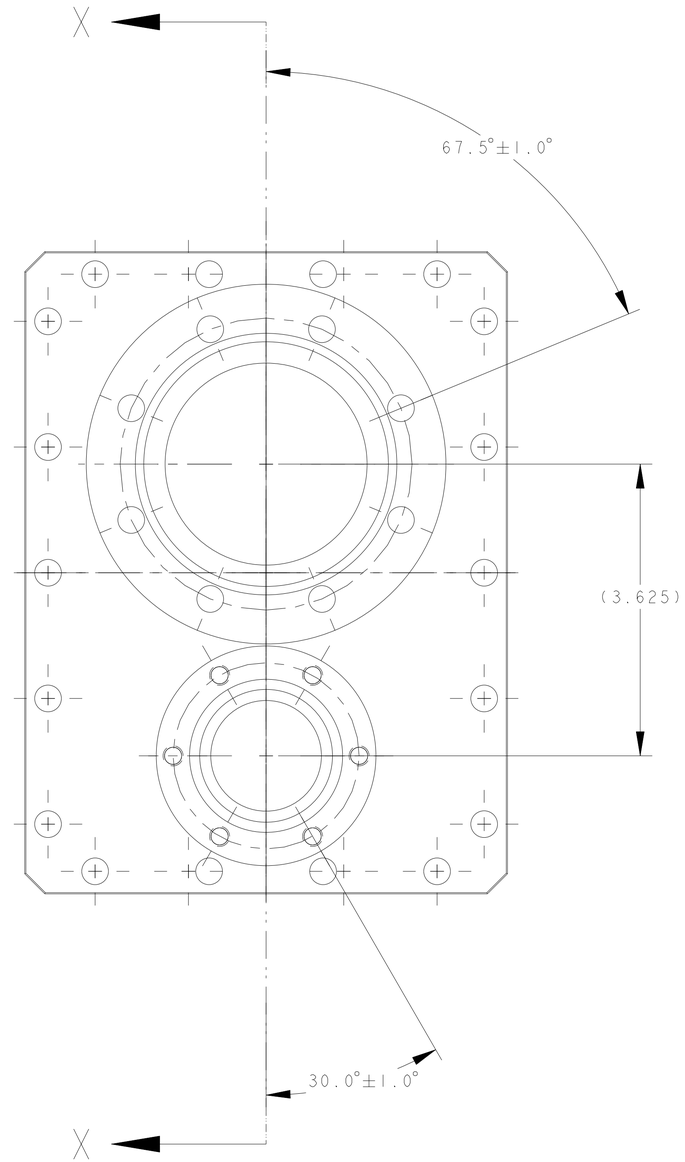

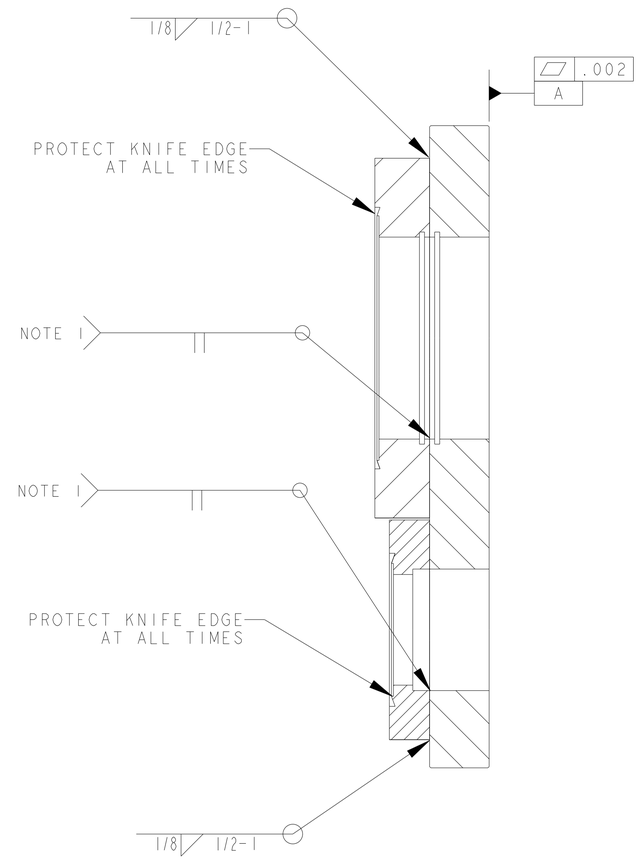

SECTION X - X

NOTES:

1. FINISHED PART TO BE VACUUM TIGHT.
   LEAK RATE NOT TO EXCEED 1 X 10^-8 TORR - LITERS PER SECOND HELIUM.
2. ULTRA-HIGH VACUUM CLEANING AND PACKING REQUIRED.
3. ASSEMBLE IN CLEAN ENVIRONMENT.
   AFTER ASSEMBLY AND WELDING, WRAP TO MAINTAIN CLEANLINESS.
4. PROTECT CONFLAT FLANGE KNIFE EDGE AT ALL TIMES.

ITEM	PART NO	REQD	DESCRIPTION	MATERIAL
3	25B409	1	VACUUM CHAMBER - VIEW PORT FLANGE	304 SS
2	25B404	1	VIEWPORT, 4.5" CONFLAT FLANGE	304 SS
1		1	2 3/4" VIEWPORT - MDC 130014 OR EQUIV.	304 SS

REV	DWG	CHK	ZONE	DATE	CHANGES

UNLESS OTHERWISE SPECIFIED
PROJECTION:

TOLERANCES	
X.X ± 0.1	FRAC. ± 1/64
X.XX ± 0.03	Angles ± 1.0°
X.XXX ± 0.010	FINISH 125

DO NOT SCALE PRINT

THREADS ARE CLASS 2
CHAMFER ENDS OF ALL SCREW TREADS 30°
CUT ROUND, 1.5 THREAD RELIEF ON MACHINED THREADS
BREAK EDGES .016 MAX. ON MACHINED WORK
REMOVE BURRS, WELD SPLATTER & LOOSE SCALE
IN ACCORDANCE WITH ASME Y14.5M & B46.1

SHOP ORDERS

ACCT NO.	NO. REQD 2	SER NO. -	
DEL TO		DATE ISSD -	
		DATE REQD -	
SURFACE TREATMT -			
IDENT METHOD TAG			
PROJECT NUMBER na			
PROJECT NAME N/A			
DWG BY Allan Demello		DATE 04-Dec-00	
CHK BY D. Oshatz		DATE	
APR BY D. Oshatz		DATE	

ERNEST ORLANDO LAWRENCE BERKELEY NATIONAL LABORATORY
UNIVERSITY OF CALIFORNIA - BERKELEY

SNS - FES MEBT
CHOPPER TARGET
VIEW PORT FLANGE WELDMENT

MICROFILMED:	DWG. TYPE	SHOWN ON	SCALE: 1/1	DO NOT SCALE PRINTS
	ASSEM	25B400	SHEET 1 OF 1	
PATENT CLEAR:	DESIGN ACCT. NO.	CATEGORY CODE	DWG. NO.	SIZE / REV.
	-	FE3312	25B4084	A

FORMAT: FORMAT_LB
Dwg. File: 25B400 Model File: 25B400