REQ	ITEM	PART NUMBER	DESCRIPTION
1	REF	25B1284A	LEFT COIL WINDING

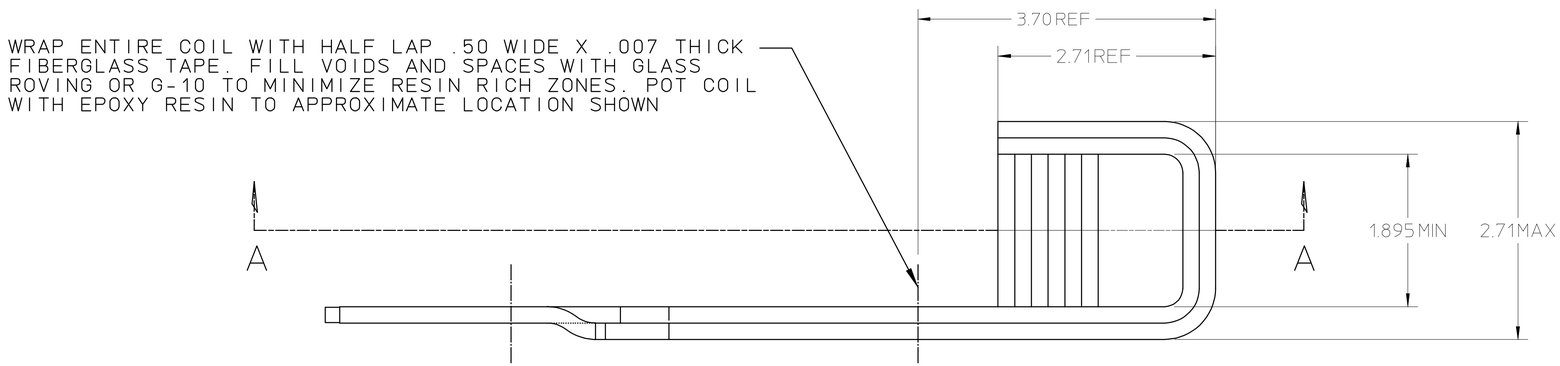

ROUND OFF LEAD ENDS TO Ø.187 (MUST FIT INTO Ø.188 HOLE)

VIEW B
SCALE: 2X
2 PLACES

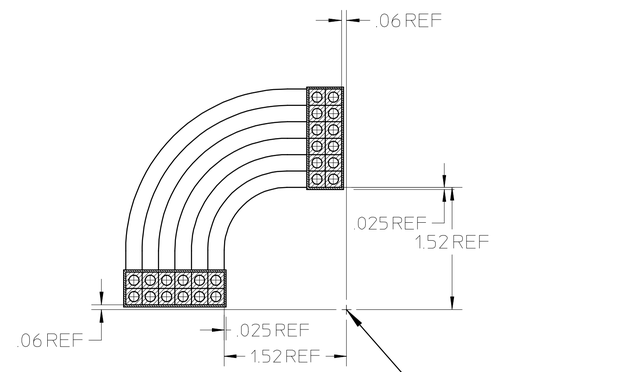

SECTION A - A

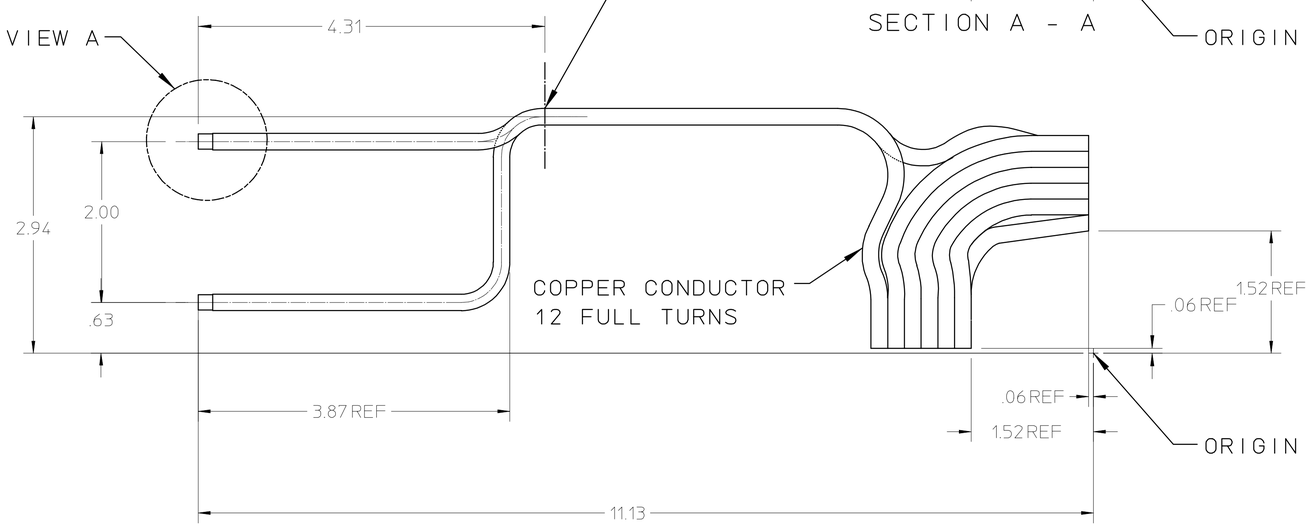

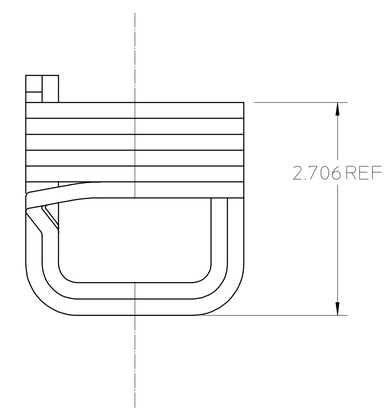

25B1614

NOTES:
1. ALL DIMENSIONS ARE IN INCHES.
2. PROTECT COIL AT ALL TIMES FROM DAMAGE AND DEBRIS.
3. PLUG AND WRAP THE TUBE ENDS WITH CLEAN CLOTH OR PAPER.

REV	DWG	CHK	ZONE	DATE	CHANGES

UNLESS OTHERWISE SPECIFIED
TOLERANCES: .X ± – ; .XX ± .02 ; .XXX ± .005 ; FRAC. ± 1/64 ; ANGLES ± 1° ; FINISH 125√
THREADS ARE CLASS 2.
CHAMFER ENDS OF ALL SCREW THREADS 30°.
CUT 1.5 PITCH THRD RELIEF WITH ROUND NOSE TOOL ON MACHINE CUT THREADS.
BREAK EDGES .016 MAX. ON MACHINED WORK
REMOVE BURRS WELD SPLATTER & LOOSE SCALE
REFERENCES: ANSI Y14.5 & B46.1.

SHOP ORDERS
ACCT NO. | SERIAL NO.
DATE ISSD | DATE REQD. | NO. REQD.
DELIVER TO
SURFACE TREATMENT: DEGREASE
IDENT. METH.: TAG
DWG. BY: Y. MINAMIHARA | DATE: 3-6-00
CHK. BY | DATE

LAWRENCE BERKELEY LABORATORY
UNIVERSITY OF CALIFORNIA-BERKELEY
SNS - FES MEBT
MECHANICAL BEAM TRANSPORT SYSTEMS - QUADS
LEFT COIL WINDING - TERMIANL DETAIL

PATENT CLEAR	DWG. TYPE	SHOWN ON	SCALE	DO NOT SCALE PRINTS
	DETAIL		FULL	
MICROFILMED	DESIGN ACCT NO.	CATEGORY CODE	DWG. NO.	SIZE / REV.
		FE3312	25B1614	