REQ	ITEM	PART NUMBER	DESCRIPTION
			DELRIN

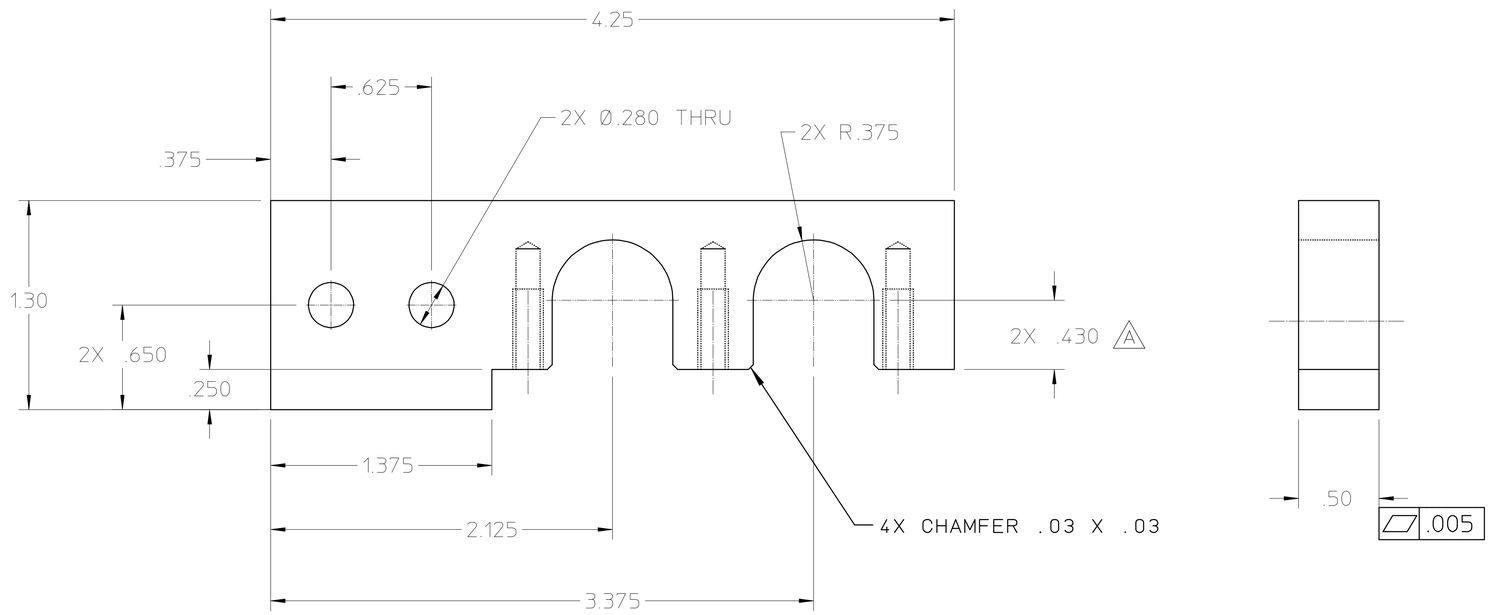

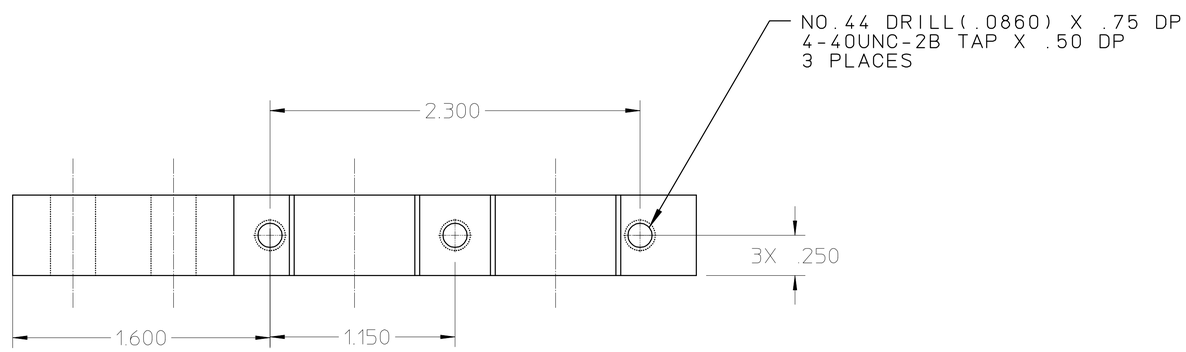

25B1554A

NOTES: 1. ALL DIMENSIONS ARE IN INCHES.

REV	DWG	CHK	ZONE	DATE	CHANGES
A	DPO		C4	11/5/01	2X .430 WAS 2X .300

UNLESS OTHERWISE SPECIFIED

TOLERANCES			
.X ±		FRAC. ±1/64	
.XX ± .02		ANGLES ±1°	
.XXX ± .005		FINISH 125√	

THREADS ARE CLASS 2
CHAMFER ENDS OF ALL SCREW THREADS 30°.
CUT 1.5 PITCH THRD RELIEF WITH ROUND NOSE TOOL ON MACHINE CUT THREADS.
BREAK EDGES .016 MAX. ON MACHINED WORK
REMOVE BURRS WELD SPLATTER & LOOSE SCALE
REFERENCES: ANSI Y14.5 & B46.1.

SHOP ORDERS

ACCT NO.		SERIAL NO.	
DATE ISSD	DATE REQD.	NO. REQD.	
DELIVER TO			
SURFACE TREATMENT	DEGREASE		
IDENT. METH.	TAG		
DWG. BY	Y. MINAMIHARA	DATE	12-15-99
CHK. BY		DATE	

LAWRENCE BERKELEY LABORATORY
UNIVERSITY OF CALIFORNIA-BERKELEY

SNS - FES MEBT

MECHANICAL BEAM TRANSPORT SYSTEMS - QUADS

POWER CABLE BRACKET

PATENT CLEAR	DWG. TYPE	SHOWN ON	SCALE 2X	DO NOT SCALE PRINTS
	DETAIL			
MICROFILMED	DESIGN ACCT NO.	CATEGORY CODE FE3312	DWG. NO. 25B1554	SIZE A / REV. A