| REQ | ITEM | PART NUMBER | DESCRIPTION |
|---|---|---|---|
| | | | OFE COPPER, PLATE |
| | | | |
| | | | |

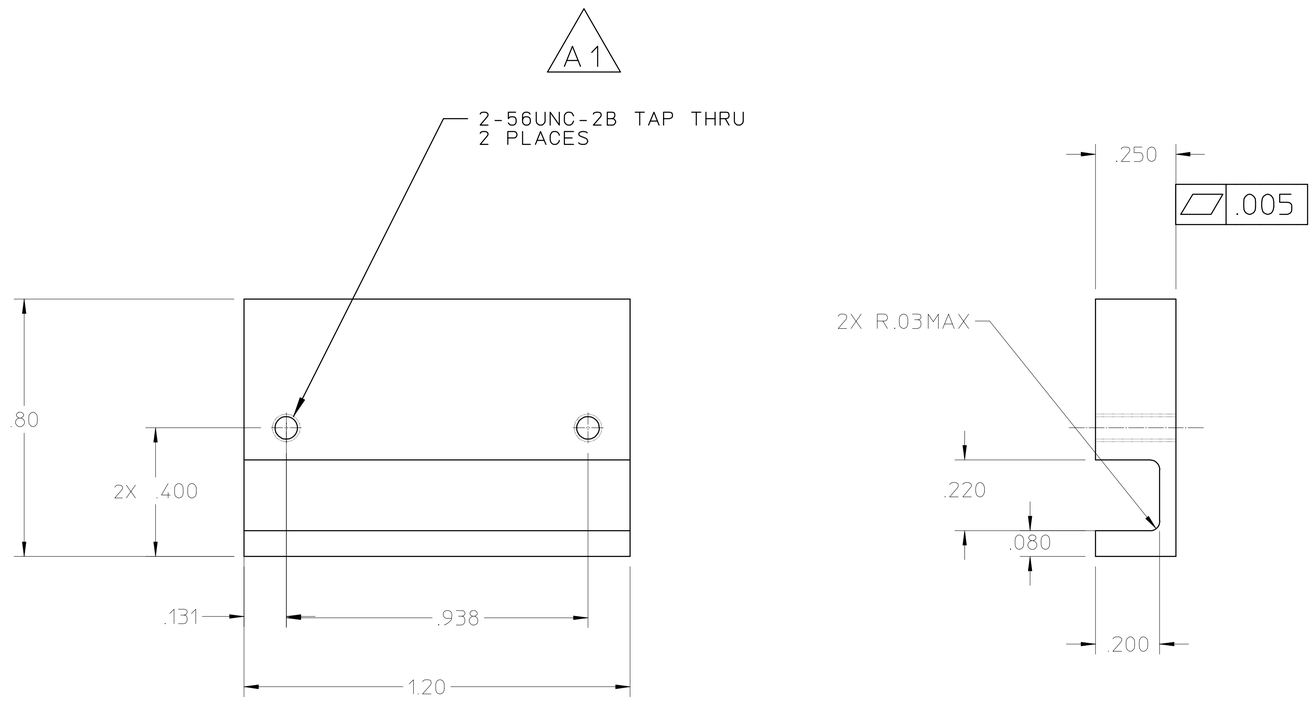


25B1444B

NOTES: 1. ALL DIMENSIONS ARE IN INCHES.

2. ELECTROPLATE 'FLASH GOLD' ALL SURFACES .00001 THICK.

| REV | DWG | CHK | ZONE | DATE | CHANGES |
|---|---|---|---|---|---|
| B1 | YM | | | 11-17-00 | REMOVED NOTE 2 TO GOLD FLASH PART |
| A1 | YM | | | 4-24-00 | WAS 4-40 UNC TAP |

UNLESS OTHERWISE SPECIFIED

TOLERANCES: .X ± – ; FRAC. ± 1/64 ; .XX ± .02 ; ANGLES ± 1° ; .XXX ± .005 ; FINISH 125√

THREADS ARE CLASS 2
CHAMFER ENDS OF ALL SCREW THREADS 30°.
CUT 1.5 PITCH THRD RELIEF WITH ROUND NOSE TOOL ON MACHINE CUT THREADS.
BREAK EDGES .016 MAX. ON MACHINED WORK
REMOVE BURRS WELD SPLATTER & LOOSE SCALE
REFERENCES: ANSI Y14.5 & B46.1.

SHOP ORDERS

ACCT NO. | SERIAL NO. | DATE ISSD. | DATE REQD. | NO. REQD.

DELIVER TO

SURFACE TREATMENT: DEGREASE

IDENT. METH.: TAG

DWG. BY: Y. MINAMIHARA | DATE: 12-15-99

CHK. BY | DATE

**LAWRENCE BERKELEY LABORATORY**
UNIVERSITY OF CALIFORNIA-BERKELEY

SNS - FES MEBT

MECHANICAL BEAM TRANSPORT SYSTEMS - QUADS

THERMOSTAT MOUNTING PLATE

| PATENT CLEAR | DWG. TYPE | SHOWN ON | SCALE | DO NOT SCALE PRINTS |
|---|---|---|---|---|
| | DETAIL | | 4X | |

| MICROFILMED | DESIGN ACCT NO. | CATEGORY CODE | DWG. NO. | SIZE | REV. |
|---|---|---|---|---|---|
| | | FE3312 | 25B1444 | | B |